Draft Comparative Effectiveness Review

Number xx

Comparative Effectiveness Review: Fecal DNA Testing in Screening for Colorectal Cancer in Average Risk Adults

Prepared for:
Agency for Healthcare Research and Quality
U.S. Department of Health and Human Services
540 Gaither Road
Rockville, MD 20850
www.ahrq.gov

Contract No.

Prepared by:
[Redacted]

Investigators

[Redacted]

AHRQ Publication No. xx-EHCxxx-EF
MONTH 2011

This report is based on research conducted by the XXX Evidence-based Practice Center under contract to the Agency for Healthcare Research and Quality (AHRQ), Rockville, MD (Contract No. XXX). The findings and conclusions in this document are those of the author(s), who are responsible for its content, and do not necessarily represent the views of AHRQ. No statement in this report should be construed as an official position of AHRQ or of the U.S. Department of Health and Human Services.

The information in this report is intended to help clinicians, employers, policymakers, and others make informed decisions about the provision of health care services. This report is intended as a reference and not as a substitute for clinical judgment.

This report may be used, in whole or in part, as the basis for the development of clinical practice guidelines and other quality enhancement tools, or as a basis for reimbursement and coverage policies. AHRQ or U.S. Department of Health and Human Services endorsement of such derivative products or actions may not be stated or implied.

This document is in the public domain and may be used and reprinted without permission except those copyrighted materials noted for which further reproduction is prohibited without the specific permission of copyright holders.

None of the investigators have any affiliations or financial involvement that conflicts with the material presented in this report.

Suggested citation: [Redacted]

Preface

The Agency for Healthcare Research and Quality (AHRQ) conducts the Effective Health Care Program as part of its mission to organize knowledge and make it available to inform decisions about health care. As part of the Medicare Prescription Drug, Improvement, and Modernization Act of 2003, Congress directed AHRQ to conduct and support research on the comparative outcomes, clinical effectiveness, and appropriateness of pharmaceuticals, devices, and health care services to meet the needs of Medicare, Medicaid, and the Children's Health Insurance Program (CHIP).

AHRQ has an established network of Evidence-based Practice Centers (EPCs) that produce Evidence Reports/Technology Assessments to assist public- and private-sector organizations in their efforts to improve the quality of health care. The EPCs now lend their expertise to the Effective Health Care Program by conducting comparative effectiveness reviews (CERs) of medications, devices, and other relevant interventions, including strategies for how these items and services can best be organized, managed, and delivered.

Systematic reviews are the building blocks underlying evidence-based practice; they focus attention on the strength and limits of evidence from research studies about the effectiveness and safety of a clinical intervention. In the context of developing recommendations for practice, systematic reviews are useful because they define the strengths and limits of the evidence, clarifying whether assertions about the value of the intervention are based on strong evidence from clinical studies. For more information about systematic reviews, see http://www.effectivehealthcare.ahrq.gov/reference/purpose.cfm

AHRQ expects that CERs will be helpful to health plans, providers, purchasers, government programs, and the health care system as a whole. In addition, AHRQ is committed to presenting information in different formats so that consumers who make decisions about their own and their family's health can benefit from the evidence.

Transparency and stakeholder input from are essential to the Effective Health Care Program. Please visit the Web site (http://www.effectivehealthcare.ahrq.gov) to see draft research questions and reports or to join an e-mail list to learn about new program products and opportunities for input. Comparative Effectiveness Reviews will be updated regularly.

We welcome comments on this CER. They may be sent by mail to the Task Order Officer named below at: Agency for Healthcare Research and Quality, 540 Gaither Road, Rockville, MD 20850, or by e-mail to epc@ahrq.hhs.gov.

Carolyn M. Clancy, M.D.
Director
Agency for Healthcare Research and Quality

Jean Slutsky, P.A., M.S.P.H.
Director, Center for Outcomes and Evidence
Agency for Healthcare Research and Quality

Stephanie Chang, M.D., M.P.H.
Director
Evidence-based Practice Program
Center for Outcomes and Evidence
Agency for Healthcare Research and Quality

Christine Chang, M.D., M.P.H.
Task Order Officer
Center for Outcomes and Evidence
Agency for Healthcare Research and Quality

Acknowledgments

Technical Expert Panel

[Redacted]

Comparative Effectiveness Review: Fecal DNA Testing in Screening for Colorectal Cancer in Average Risk Adults

Structured Abstract

Objectives. To review the evidence on fecal DNA testing to screen for colorectal cancer in adults at average risk for colorectal cancer.

Data sources. We searched MEDLINE, Cochrane Database of Systematic Reviews, Cochrane Central Register of Controlled Trials, Database of Abstracts of Reviews of Effects, and the Health Technology Assessments Database from 2000 through March 2011 and grey literature including recent conference abstracts, regulatory documents, unpublished information from the manufacturer, and expert suggestions.

Review methods. Two investigators independently reviewed all abstracts and full-text articles against a set of a priori inclusion criteria, and assessed the quality of included articles using established criteria. Disagreements were resolved with consultation of a third investigator. We evaluated and summarized clinical and methodological characteristics and internal and external validity of studies. Last, we assessed the overall strength of evidence for each outcome based on risk of bias, consistency, directness, and precision of the evidence.

Results. Despite the availability of numerous excluded initial validation studies of fecal DNA testing, we found only three studies that examined the test accuracy of fecal DNA testing in screening populations. Two fair-quality diagnostic accuracy studies (n=5004) evaluating a multi-marker fecal DNA found differing sensitivities to detect CRC (25 percent [95% CI, 5 to 57 percent] versus 51.6 percent, [95% CI, 34.8 to 68.0]). Sensitivity for advanced adenomas was similarly low in both studies. Another small study and a subset analysis of one of the larger studies were both poor quality and evaluated different tests. We found no studies that specifically evaluated the harms of fecal DNA testing. While three poor-quality analytic validity studies showed that technological advances can improve the analytic sensitivity of assays, it is unclear if these advances are applicable to the currently available test. Five fair-to poor-quality studies that evaluated acceptability found that fecal DNA testing is generally acceptable, although an important test attribute for acceptability appears to be the test's accuracy (which is yet unknown). No studies have evaluated the relative acceptability of fecal DNA tests to FIT tests.

Conclusions. Fecal DNA tests have insufficient evidence about its diagnostic accuracy to screen for colorectal cancer in asymptomatic, average risk patients. There is also insufficient evidence for the harms, analytic validity, and acceptability of testing in comparison to other screening modalities. Existing evidence has little or no applicability to currently available fecal DNA testing.

Table of Contents

Executive Summary ES-1
Introduction 1
Background 1
Prevalence and Disease Burden 1
Adenoma to Colorectal Cancer Progression 1
Screening of Colorectal Cancer 2
Scope and Purpose 7
Key Questions 7
Methods 9
Topic Development and Refinement 9
Analytic Framework 9
Literature Search Strategy 10
Process for Study Selection 10
Data Abstraction and Data Management 12
Individual Study Quality Assessment 12
Data Synthesis 12
Grading the Strength of Evidence 13
Applicability 13
Results 14
Literature Yield 14
Results of Included Studies 16
Summary and Discussion 34
Strength and applicability of evidence 34
Evidence gaps 36
Limitations 39
Future Research 41
Upcoming studies 41
Other emerging genomic tests 41
References 43
Abbreviations 51
Glossary 52

Tables

Table 1. Development of fecal DNA testing for colorectal cancer screening
Table 2. Inclusion criteria
Table 3. Strength of evidence grades and definitions
Table 4. Excluded studies focusing on test development and/or initial validation of fecal DNA testing for colorectal cancer
Table 5. Patient characteristics for studies of daignostic accuracy of fecal DNA testing (KQ2)
Table 6. Diagnostic accuracy of fecal DNA testing in screening populations (KQ2)
Table 7. Limitations and quality concerns for diagnostic accuracy studies of fecal DNA testing (KQ2)
Table 8. Definitions for analytic validity

Table 9. Analytic validity of fecal DNA testing (KQ4)
Table 10. Patient preferences and acceptability of fecal DNA testing (KQ5)
Table 11. Strength of evidence for fecal DNA testing
Table 12. Evidence landscape for fecal DNA testing

Figures

Figure 1. Analytic framework of the benefits and harms of fecal DNA testing in screening for colorectal cancer
Figure 2. Literature flow diagram

Appendixes

Appendix A. Search strategy
Appendix B. List of excluded studies

Executive Summary

Background

Colorectal cancer (CRC) is the third most common cancer in both men and women and is the third leading cause of cancer deaths in the US.[1] Incidence and mortality rates for CRC have declined over the past two decades, corresponding with an increase in self-reported screening rates.[1] However, screening rates remain suboptimal. While different US guideline-issuing organizations agree on the majority of recommended CRC screening options, there are differences between some recommended options, for example fecal DNA testing. In 2008, the United States Preventive Services Task Force (USPSTF) found that evidence was insufficient to recommend fecal DNA testing for CRC screening.[2,3] However, the American Cancer Society (ACS), the U.S. Multi-Society Task Force (MSTF) on Colorectal Cancer, and the American College of Radiology (ACR) collectively recommended fecal DNA testing as an alternative screening method. The ACS-MSTF-ACR's recommendation was based on lower-quality evidence that was excluded from the review conducted on behalf of the USPSTF.[4]

Fecal DNA tests are designed to detect molecular abnormalities in cells from cancer or precancerous lesions that are shed into the stool. Fecal DNA testing to screen for CRC has evolved significantly over time, both in improvements in understanding relevant molecular abnormalities associated wth CRC and technological advances to allow for improved detection of molecular abnormalities in DNA in the stool.[5] Molecular abnormalities that have served as the basis for CRC screening tests have focused on three major genetic mechanisms: chromosomal instability due to abnormalities in mutational hotspots like *APC*, *KRAS*, and *TP53*; microsatellite instability due to loss of function of mismatch repair genes that can result in accumulation of errors within the DNA sequence; and DNA methylation, an epigenetic alteration, in which promoter sites of genes are hypermethylated leading to suppression of gene transcription.[6]

Thus far a single company, Exact Sciences, has been the major manufacturer and commercial developer of fecal DNA testing in the US (Table 1). Currently, only one fecal DNA test, ColoSure, is commercially available. This test is a single marker fecal DNA assay for methylated vimentin developed by Exact Sciences and distributed by LabCorp. Marketing for commercially available fecal DNA testing specifies that the test is intended for individuals who are not eligible (either unable or unwilling) for more invasive CRC screening (i.e., colonoscopy, flexible sigmoidoscopy, or CT colonography).[7]

Objectives

This report include six key questions to systematically review the evidence on fecal DNA testing to screen for CRC in average risk adults (Figure 1).

Question 1: Clinical utility.

What is the effectiveness of fecal DNA testing (alone or in combination with other screening tests) to screen for CRC in reducing *morbidity* (CRC incidence) or *mortality* (all-cause or CRC-specific)?

Question 2: Clinical validity.

2.1. What are the absolute test performance characteristics (e.g., sensitivity, specificity) of fecal DNA testing for CRC screening, as compared to colonoscopy?

2.2. What is the relative test performance of fecal DNA testing as compared to other established screening modalities in current practice?

Question 3: Interval of Screening.

What is the test performance of fecal DNA testing across different screening interval(s)?

Question 4: Analytic Validity.

4.1. What is the analytic validity (analytic sensitivity, specificity, and reproducibility) of currently available fecal DNA assays?

4.2. What are the important analytic and pre-analytic factors that can affect fecal DNA assay validity?

Question 5: Acceptability of Testing.

What is the acceptability and adherence of fecal DNA screening in comparison to other stool-based screening tests, or in comparison to more invasive modalities of screening?

Question 6: Harms.

What are the potential harms of fecal DNA testing?

Analytic Framework

Figure 1. Analytic Framework of the benefits and harms of Fecal DNA Testing in Screening for Colorectal Cancer

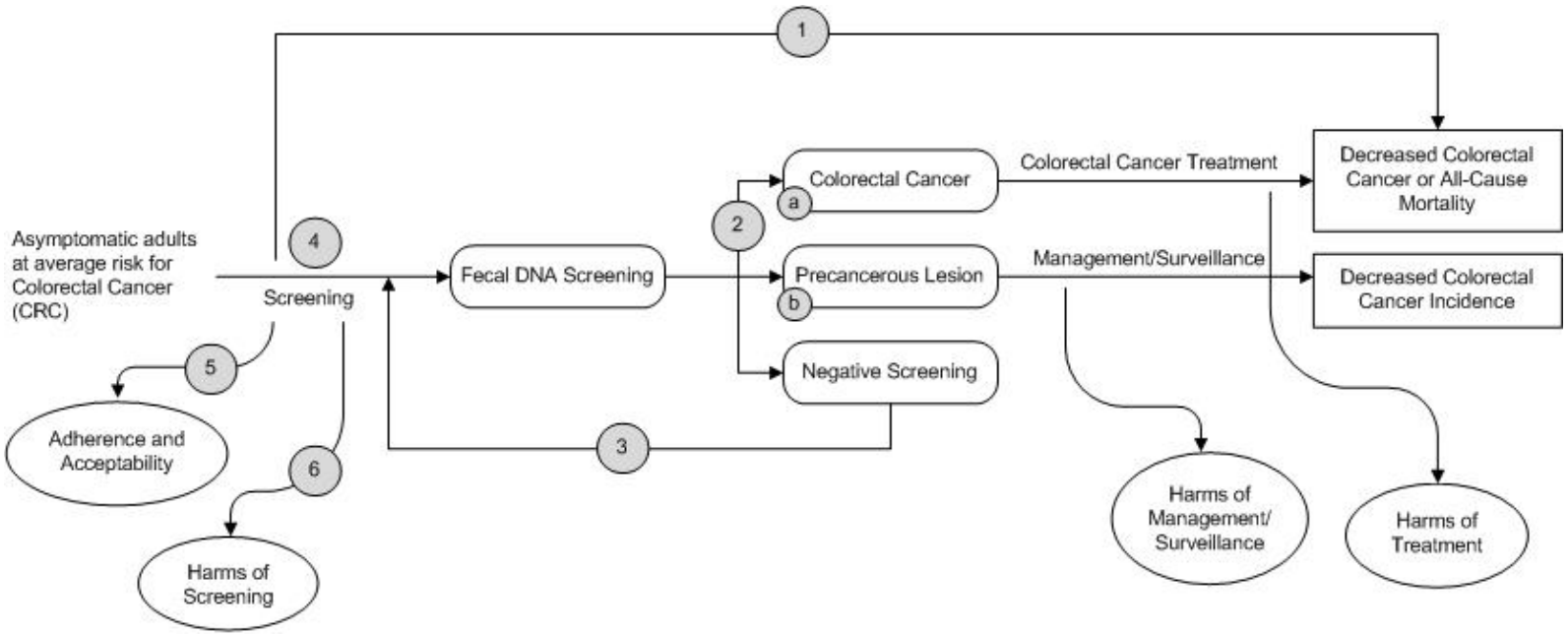

Methods

Input from Stakeholders

This topic was initiated based on a public nomination submitted to the AHRQ EHC program. Several individuals expressed concern about the optimal timing of this review during public review due to the current development of new fecal DNA screening test. Despite these comments, it was determined that a review would still be helpful to stakeholders in the interim. A Technical Expert Panel (TEP) helped in the refinement of our review protocol and provided details about fecal DNA test development.

Data Sources and Selection

We performed comprehensive literature searches in the following databases from 2000 through March 2011: MEDLINE, Cochrane Database of Systematic Reviews, Cochrane Central Register of Controlled Trials, Database of Abstracts of Reviews of Effects, and the Health Technology Assessments Database. Searches of these databases were supplemented with manual searching of reference lists of relevant review articles and suggestions made by TEP members. We also performed a focused search of the grey literature, including: unpublished data from recent conference abstracts (2009–2011), regulatory documents, and information regarding ongoing and future research via clinical trial registry entries. Additional unpublished literature was sought via a Scientific Information Packet (SIP) request to Exact Sciences.

Two reviewers independently screened abstracts against a set of *a priori* inclusion criteria. Included studies were limited to asymptomatic screening populations, published since 2000 in English language. Full-text articles of abstracts meeting inclusion criteria were retrieved and dual-reviewed against the inclusion criteria. Disagreements were resolved with consultation of a third reviewer.

Data Extraction and Quality Assessment

Data from all included studies were abstracted into standardized evidence tables by one reviewer and checked by a second reviewer. Separate abstraction forms were created for key questions. We abstracted important details relating to study design, population characteristics, test and comparators, and all relevant outcomes.

We applied the study design-specific quality criteria of the USPSTF to assess the methodological quality of included studies.[8] We supplemented these quality criteria with methods from the Evaluation of Genomic Applications in Practice and Prevention (EGAPP) Working Group (specific to genetic testing),[9] the Newcastle Ottawa Scale (specific to cohort studies),[10] and the QUADAS criteria (specific to diagnostic accuracy studies).[11] Two independent reviewers assigned a quality rating of the internal validity for each study. Disagreements were resolved by discussion and consensus or by consulting a third, independent reviewer.

Data Synthesis and Analysis

We conducted qualitative syntheses of study results for each key question. We did not conduct meta-analysis of results due to the limited number of studies for each key question and clinical differences between studies. For qualitative syntheses, we evaluated

and summarize clinical and methodological characteristics of included studies, as well as important internal (quality) and external (applicability) study characteristics. The strength of evidence for primary outcomes was graded using the standard process of the Evidence-based Practice Centers, based on four major domains: risk of bias, consistency, directness, and precision of the evidence.[12]

Results

Our literature search yielded 324 citations from electronic database searches and outside sources (Figure 2). Based on the review of title and abstracts, we subsequently reviewed 33 full-text articles for their eligibility. We included 11 articles, three diagnostic accuracy studies (clinical validity) that met inclusion criteria for Key Question 2, three analytic validity studies for Key Question 4, and five studies of acceptability or preference of testing for Key Question 5. Two studies for Key Question 2 also reported adherence to testing and are discussed with Key Question 5 results. We found no studies that addressed clinical utility (Key Question 1), intervals of screening (Key Question 3), or specific harms of screening (Key Question 6).

Figure 2. Literature flow diagram

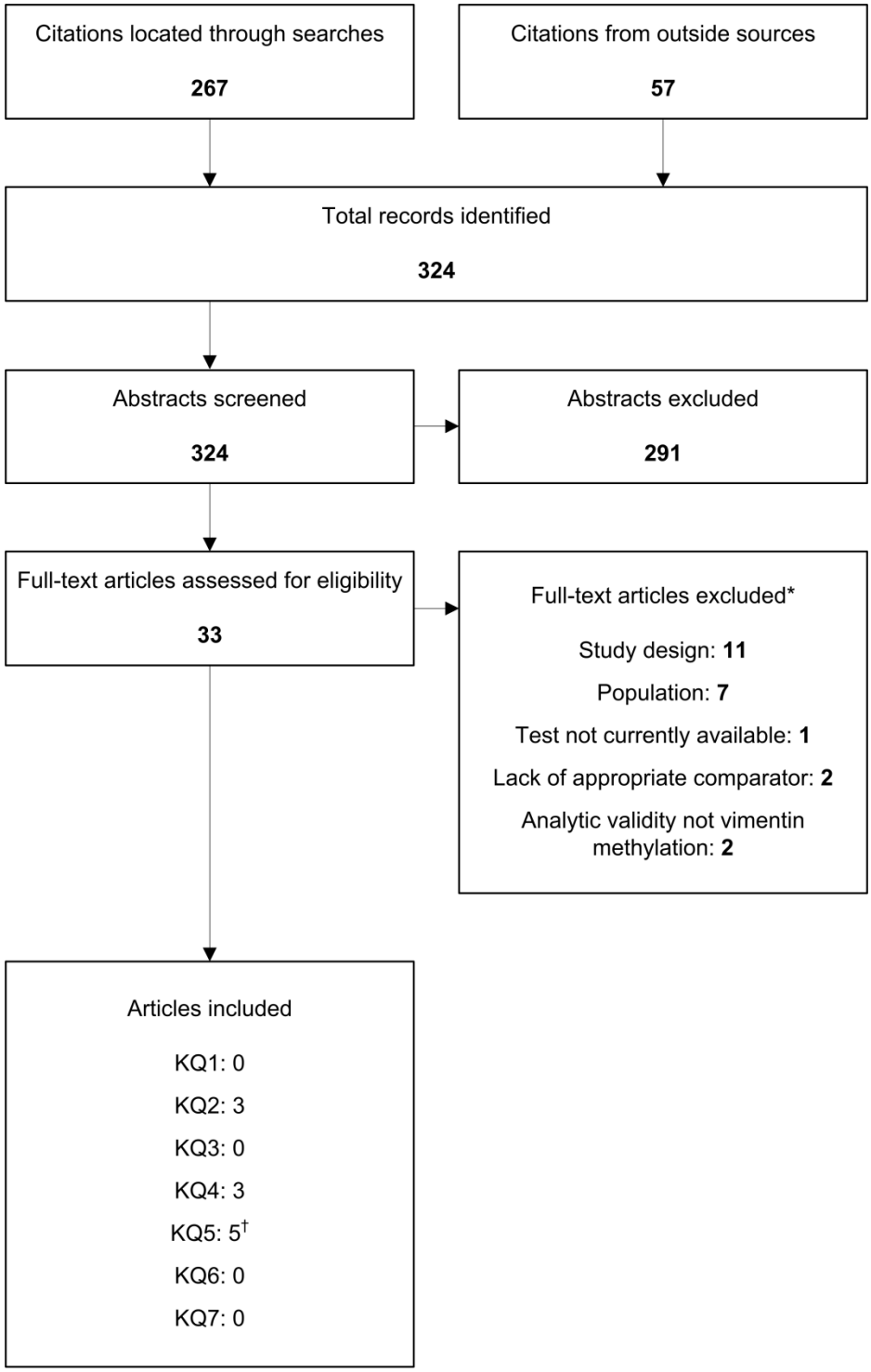

* 1 article was excluded for different reasons for different key questions
† 2 articles from KQ2 reported adherence to testing (and therefore are also discussed with KQ5)

Key questions 2 and 6: Diagnostic accuracy and harms of fecal DNA testing

Despite the availability of numerous initial validation studies of fecal DNA testing, we only found three studies that examined the accuracy of fecal DNA testing in screening populations (Table 2).[13-15] Two fair quality diagnostic accuracy studies (n=5004) in screening cohorts of average-risk patients undergoing colonoscopy evaluated a fecal DNA test (SDT-1) which was a prototype to a later version that was clinically available as PreGen Plus (Table 1).[13,14] These two studies found different sensitivities for detection of CRC (25 percent [95% CI, 5 to 57 percent] versus 51.6 percent [95% CI, 34.8 to 68.0]) (Table 2). Both found similarly low sensitivities for detection of advanced adenomas (Table 2). The specificity for detection for CRC or advanced adenomas was approximately 95 to 96 percent (Table 2). In one study, the specificity for the prototype to PreGen Plus (SDT-1) and Hemoccult II were not statistically significantly different, although the study had limited power to detect a difference (Table 3).[14] One smaller study (n=441) evaluating the test accuracy of *KRAS* mutations,[15] and a subset analysis (n=217) of the diagnostic accuracy study by Ahlquist and colleagues evaluating a multi-marker test that included methylated vimentin (SDT-2) were both poor quality. None of these studies evaluated fecal DNA tests applicable to the currently available test, ColoSure.

We did not find any studies that specifically evaluated the harms of fecal DNA testing. The major hypothesized harms of fecal DNA testing is the sequelae from diagnostic inaccuracy (false positives and false negatives).

Key Question 4: Analytic validity of fecal DNA testing

We found 3 poor quality studies that specifically evaluated the analytic validity of currently available fecal DNA assays, a single-marker test for methylated vimentin.[16-18] These studies showed that technological advances (i.e., methyl-BEAMing and methyl-binding domain enrichment) can improve the analytic sensitivity of assays to detect methylated vimentin in stool samples (Table 4). None of the studies evaluated the repeatability, reproducibility, or analytic specificity of testing. These three studies were generally of poor quality, and it is unclear if the exact technological advances evaluated in these studies are applicable to the previously studied (SDT-2) or currently available test (ColoSure) for methylated vimentin.

Key Question 5: Acceptability and adherence of testing

We found 5 fair- to poor-quality studies that evaluated the acceptability and 2 diagnostic accuracy studies that reported the adherence to fecal DNA testing.[13,14,19-23] From very limited evidence, it appears that fecal DNA testing is generally acceptable, although an important test attribute for acceptability appears to be the test's accuracy (Table 5). In one fair-quality diagnostic accuracy study, fecal DNA adherence was lower than adherence to FOBT.[14] No studies have evaluated the relative acceptability or adherence of fecal DNA tests to FIT tests. It is likely that future fecal DNA testing will be sufficiently different both in the stool collection and in test accuracy, such that this currently available evidence on acceptability and adherence to fecal DNA testing will no longer be relevant.

Discussion

Strength of evidence

Despite considerable media attention and expert-based clinical recommendations that include fecal DNA testing for CRC screening, at present, fecal DNA tests have insufficient evidence about their clinical validity (diagnostic accuracy) in patients at average risk for CRC. Due to the differences in tests evaluated and differences in sensitivity between the two studies that evaluated the same test, the evidence for the test accuracy for fecal DNA testing is both inconsistent and imprecise. Fecal DNA test development has evolved significantly over the past decade. There have been advances in the understanding of molecular markers that reflect neoplastic change and advances in technologies to stabilize, extract, and amplify/detect low levels of human target DNA in stool samples. Therefore, the 3 studies on diagnostic accuracy of fecal DNA tests in screening populations do not reflect the current commercially available fecal DNA test (or soon to be available fecal DNA testing). Likewise, harms and acceptability of, and adherence to, fecal DNA testing in comparison to other screening modalities also have insufficient evidence and are largely not applicable to currently available fecal DNA tests. Because patients' (and clinicians') preference of test choice is influenced by test performance, acceptability and adherence to testing will need to be reexamined once test accuracy is known. Subtleties in stool collection may also affect acceptability and adherence, and therefore may change future fecal DNA testing that no longer requires a single whole-stool specimen.

Evidence gaps and future research

The most critical evidence gap for fecal DNA testing to screen for CRC is the lack of appropriately designed diagnostic accuracy studies applicable to currently available fecal DNA testing. At a minimum, clinical decision making should be based upon evidence from test validation studies conducted in the intended population (i.e., asymptomatic screening population) for which the test is proposed. Empiric evidence shows that distorted selection of participants (including non-representative patients) and use of case-control study designs overestimate overall test accuracy due to both variation and spectrum bias.[24,25] Based on this review, we found discordant results from the 3 included diagnostic accuracy studies in comparison to the initial validation studies identified but excluded from this review. For example, initial validation studies for the prototype of PreGen Plus had sensitivity for CRC estimates around 90 percent, and subsequent test validation studies in screening populations showed much lower sensitivities (about 25 to 50 percent).[26] When better quality, more applicable diagnostic accuracy studies in screening populations become available, clinicians and decision makers can use robust models that have been developed by the National Cancer Institute (NCI) Cancer Intervention and Surveillance Modeling Network (CISNET) for evaluating CRC screening (e.g., MISCAN, SimCRC) to estimate net benefit of testing (of a program of testing, and harms of testing due to diagnostic inaccuracies) and optimal intervals of testing, compared to other currently used or promising screening modalities. Other important evidence gaps include the relative acceptability of and adherence to fecal DNA testing compared with FIT (which is a stool based test that does not require dietary or medication restrictions), and issues around fecal DNA testing analytic validity,

specifically accuracy, and repeatability and reproducibility. In addition, reporting of potentially important details that may affect analytic validity of assays should be routinely reported in clinical evaluation (clinical validity) studies. Especially given the constant changes in test development, test developers and researchers need to be transparent and explicit about differences in the assays evaluated in studies and the actual assays that are clinically available.

Limitations

The limitations in this review are primarily from the limitations in the primary research (small body of variable, often poor quality studies) and the evolving nature of fecal DNA testing (resulting in a mismatch between primary research and available testing). However, there are few important limitations in scope and timing of this review. Our review focused on fecal DNA testing to screen for CRC, and therefore did not address other potential roles of fecal DNA testing. Also, our review did not include stool based testing using RNA or other genetic/genomic based testing in plasma. However, these newer types of genetic/genomic testing to screen for CRC are more developmental than fecal DNA testing. Last, this review will likely be out of date as new tests and evidence supporting them become available within the next 2 years.

Abbreviations

95% CI- 95 percent confidence interval
ACR- American College of Radiology
ACS- American Cancer Society
AHRQ- Agency for Healthcare Research and Quality
CISNET- Cancer Intervention and Surveillance Modeling Network
CLIA- Clinical Laboratory Improvement Amendments
CRC- Colorectal cancer
CT colonography- Computed tomographic colonography
DIA- DNA integrity assay
DNA- Deoxyribonucleic acid
EHC Program- Effective Health Care Program
FDA- US Food and Drug Administration
FIT- Fecal immunohistochemical test
FOBT- Fecal occult blood test (usually used to refer to guaiac based tests like Hemoccult II or Hemoccult Sensa versus immunohistochemical based tests for hemoglobin)
KQ- Key question
LDT- Laboratory-developed test
MBD- Methyl-binding domain
MSTF- Multi- Society Task Force
NCI- National Cancer Institute
NR- Not reported
PCR- Polymerase chain reaction
RNA- Ribonucleic acid
sDNA – Stool DNA test
SIP- Scientific Information Packet
TEP- Technical Expert Panel

US- United States
USPSTF- U.S. Preventive Services Task Force

Glossary

Absolute test performance- Performance of a test (sensitivity, specificity) when compared to the gold standard

Accuracy- Ability of assay to measure what it purports to measure determined independently by a reference method

Adenoma- Benign tumor from epithelial tissue

Advanced adenomas- Adenomas 1 cm or greater, or with villous components (tubulovillous or villous), or with high-grade or severe dysplasia

Aliquots- A measured portion of a sample taken for analysis

Analytic factors- Test methods and performance of procedures, and monitoring and verification of accuracy and reliability of test results

Analytic sensitivity (lower limit of detection)- Ability of assay to detect all true positive specimens, for quantitative tests this is defined as the smallest quantity of a substance that can be reliably detected or quantified

Analytic specificity- Ability present in the sample of assay to measure the target substance when potentially interfering or cross-reacting substances are present in the sample

Analytic validity- An assay's ability to accurately and reliably measure the genotype (or analyte) of interest

Assay- An analysis conducted to verify the presence (and amount) of a substance

Chromosomal instability- The gain or loss of whole chromosomes or fractions of chromosomes

Clinical utility- A test's ability to improve clinical outcomes and the test's usefulness and value it adds to patient management decision-making, compared with current management without genetic testing

Clinical validity- A test's ability to accurately and reliably predict the clinically defined disorder or phenotype of interest

DNA integrity- Potential biomarker for colorectal cancer because DNA shed from cancer cells have been characterized as having longer DNA fragments as compared to DNA shed from non-cancer cells.

Epigenetics- Changes in gene expression caused by mechanisms other than changes in the DNA sequence

Guaiac based fecal occult blood test (FOBT)- An assay to detect the presence of hemoglobin in the feces that is not visibly apparent in which feces is applied to a thick piece of paper attached to a thin film coated with guaiac (a phenolic compound)

Immunohistochemical based fecal occult blood test (FOBT) or fecal immunohistochemical test (FIT)- An assay to detect the presence of hemoglobin in feces that is not visibly apparent in which a fecal sample is collected with a small brush and transferred to a test card or slide. Occult blood is then detected using an antibody specific for human hemoglobin.

Initial test validation- study designed to determine ability and diagnostic accuracy of a test in persons with the target condition (as opposed to validation in the test's intended population); for this report in persons with known CRC or colorectal adenomas; these studies are most often case-control studies in which cases are persons with known CRC or colorectal cancer versus healthy controls

Methylation- The addition of a methyl group

Microsatellite instability- DNA damage due to defects in the normal DNA repair process

Pre-analytic factors- factors that may affect test performance prior to analysis specimen collection, processing, handling, and delivery to testing site

Relative test performance- Diagnostic accuracy (sensitivity, specificity) when compared to another test that is not the gold standard

Repeatability- Replication of results when the assay is performed multiple times on a single specimen

Transcription- the copying of DNA into mRNA in gene expression

References

1. American Cancer Society. Colorectal Cancer Facts & Figures 2011-2013. Atlanta: American Cancer Society; 2011. PMID: None.

2. Whitlock, EP, Lin, J, Liles, E, et al. Screening for colorectal cancer: an updated systematic review. Report No.: 08-05-05124-EF-1. Rockville, MD: Agency for Healthcare Research & Quality; 2008. PMID: 20722162.

3. Agency for Healthcare Research and Quality. Screening for colorectal cancer: U.S. Preventive Services Task Force recommendation statement. Ann Intern Med 2008;149(9):627-37. PMID: 18838716.

4. Burt RW. Colorectal cancer screening. Current Opinion in Gastroenterology 2010 Sep;26(5):466-70. PMID: 20664346.

5. Potack J, Itzkowitz SH. Practical advances in stool screening for colorectal cancer. Journal of the National Comprehensive Cancer Network 2010 Jan;8(1):81-92. PMID: 20064291.

6. Anderson WF, Guyton KZ, Hiatt RA, et al. Colorectal cancer screening for persons at average risk. Journal of the National Cancer Institute 2002 Aug 7;94(15):1126-33. PMID: 12165637.

7. DNA Direct. Who Should Consider ColoSure™ Colon Cancer Screening? San Francisco: DNA Direct Incorporated; 2011. Available at: https://www.dnadirect.com/web/article/screening-tests/colosure-stool-dna-testing/24/who-should-consider-screening. Accessed on July 20, 2011. PMID None.

8. Agency for Healthcare Research and Quality. U.S. Preventive Services Task Force Procedure Manual. http://www uspreventiveservicestaskforce org/uspstf08/methods/procmanual htm. AHRQ Publication No.08-05118-EF. Rockville, MD: Agency for Healthcare Research and Quality; 2008. PMID: None.

9. Teutsch SM, Bradley LA, Palomaki GE, et al. The evaluation of genomic applications in practice and prevention (EGAPP) initiative: methods of the EGAPP working group. Genet Med 2009 Jan;11(1):3-14. PMID: 18813139.

10. Wells GA, Shea B, O'Connell D, et al. The Newcastle-Ottawa Scale (NOS) for assessing the quality of nonrandomised studies in meta-analyses. Ottawa: Ottawa Hospital Research Institute; 2011. Available at: http://www.ohri.ca/programs/clinical_epidemiology/oxford.asp. Accessed on March 11, 2011. PMID None.

11. Whiting P, Rutjes AW, Reitsma JB, et al. The development of QUADAS: a tool for the quality assessment of studies of diagnostic accuracy included in systematic reviews. BMC Med Res Methodol 2003 Nov 10;3:25. PMID: 14606960.

12. Owens DK, Lohr KN, Atkins D, et al. AHRQ series paper 5: grading the strength of a body of evidence when comparing medical interventions--agency for healthcare research and quality and the effective health-care program. J Clin Epidemiol 2010 May;63(5):513-23. PMID: 19595577.

13. Ahlquist DA, Sargent DJ, Loprinzi CL, et al. Stool DNA and occult blood testing for screen detection of colorectal neoplasia. Annals of Internal Medicine 2008 Oct 1;149(7):441-50. PMID: 18838724.

14. Imperiale TF, Ransohoff DF, Itzkowitz SH, et al. Fecal DNA versus fecal occult blood for colorectal-cancer screening in an average-risk population. N Engl J Med 2004;2004(26):2704-14. PMID: 15616205.

15. Haug U, Hillebrand T, Bendzko P, et al. Mutant-enriched PCR and allele-specific

hybridization reaction to detect K-ras mutations in stool DNA: high prevalence in a large sample of older adults. Clinical Chemistry 2007 Apr;53(4):787-90. PMID: 17317884.

16. Li M, Chen WD, Papadopoulos N, et al. Sensitive digital quantification of DNA methylation in clinical samples. Nature Biotechnology 2009 Sep;27(9):858-63. PMID: 19684580.

17. Zou H, Harrington J, Rego RL, et al. A novel method to capture methylated human DNA from stool: implications for colorectal cancer screening. Clin Chem 2007;2007(9):1646-51. PMID: 17712002.

18. Chen WD, Han ZJ, Skoletsky J, et al. Detection in fecal DNA of colon cancer-specific methylation of the nonexpressed vimentin gene. Journal of the National Cancer Institute 2005 Aug 3;97(15):1124-32. PMID: 16077070.

19. Schroy PC, III, Heeren TC. Patient perceptions of stool-based DNA testing for colorectal cancer screening. Am J Prev Med 2005;2005(2):208-14. PMID: 15710277.

20. Berger BM, Schroy PC, III, Rosenberg JL, et al. Colorectal cancer screening using stool DNA analysis in clinical practice: early clinical experience with respect to patient acceptance and colonoscopic follow-up of abnormal tests. Clinical Colorectal Cancer 2006 Jan;5(5):338-43. PMID: 16512992.

21. Schroy PC, III, Lal S, Glick JT, et al. Patient preferences for colorectal cancer screening: how does stool DNA testing fare? Am J Manag Care 2007;13(6):393-400. PMID: 17620034.

22. Marshall DA, Johnson FR, Phillips KA, et al. Measuring patient preferences for colorectal cancer screening using a choice-format survey. Value in Health 2007 Sep;10(5):415-30. PMID: 17888107.

23. Marshall DA, Johnson FR, Kulin NA, et al. How do physician assessments of patient preferences for colorectal cancer screening tests differ from actual preferences? A comparison in Canada and the United States using a stated-choice survey. Health Economics 2009 Dec;18(12):1420-39. PMID: 19191268.

24. Lijmer JG, Mol BW, Heisterkamp S, et al. Empirical evidence of design-related bias in studies of diagnostic tests. JAMA 1999;282(11):1061-66. PMID: 10493205.

25. Whiting P, Rutjes AW, Reitsma JB, et al. Sources of variation and bias in studies of diagnostic accuracy: a systematic review. Ann Intern Med 2004 Feb 3;140(3):189-202. PMID: 14757617.

26. Bosch LJ, Carvalho B, Fijneman RJ, et al. Molecular tests for colorectal cancer screening. Clin Colorectal Cancer 2011 Mar 1;10(1):8-23. PMID: 21609931.

27. Ahlquist DA, Skoletsky JE, Boynton KA, et al. Colorectal cancer screening by detection of altered human DNA in stool: feasibility of a multitarget assay panel. Gastroenterology 2000 Nov;119(5):1219-27. PMID: 11054379.

28. Tagore KS, Lawson MJ, Yucaitis JA, et al. Sensitivity and specificity of a stool DNA multitarget assay panel for the detection of advanced colorectal neoplasia. Clinical Colorectal Cancer 2003 May;3(1):47-53. PMID: 12777192.

29. Calistri D, Rengucci C, Bocchini R, et al. Fecal multiple molecular tests to detect colorectal cancer in stool. Clinical Gastroenterology & Hepatology 2003 Sep;1(5):377-83. PMID: 15017656.

30. Brand RE, Ross ME, Shuber AP. Reproducibility of a multitarget stool-based DNA assay for colorectal cancer detection. American Journal of Gastroenterology 2004 Jul;99(7):1338-41. PMID: 15233675.

31. Syngal S, Stoffel E, Chung D, et al. Detection of stool DNA mutations before and after treatment of colorectal neoplasia. Cancer 2006 Jan 15;106(2):277-83. PMID: 16342248.

32. Whitney D, Skoletsky J, Moore K, et al. Enhanced retrieval of DNA from human fecal samples results in improved performance of colorectal cancer screening test. Journal of Molecular Diagnostics 2004 Nov;6(4):386-95. PMID: 15507679.

33. Olson J, Whitney DH, Durkee K, et al. DNA stabilization is critical for maximizing performance of fecal DNA-based colorectal cancer tests. Diagnostic Molecular Pathology 2005 Sep;14(3):183-91. PMID: 16106201.

34. Itzkowitz SH, Jandorf L, Brand R, et al. Improved fecal DNA test for colorectal cancer screening. Clinical Gastroenterology & Hepatology 2007 Jan;5(1):111-17. PMID: 17161655.

35. Itzkowitz S, Brand R, Jandorf L, et al. A simplified, noninvasive stool DNA test for colorectal cancer detection. American Journal of Gastroenterology 2008 Nov;103(11):2862-70. PMID: 18759824.

36. Baek YH, Chang E, Kim YJ, et al. Stool methylation-specific polymerase chain reaction assay for the detection of colorectal neoplasia in Korean patients. Diseases of the Colon & Rectum 2009 Aug;52(8):1452-59. PMID: 19617759.

37. Zou H, Allawi H, Cao X, et al. Sensitive quantification of vimentin methylation with a novel methylation specific qInvader technology. Clinical Chemistry 2010 Sep;56(6 Suppl.):D-144. PMID: None.

Table 1. Development of fecal DNA testing for colorectal cancer screening

	Prototype sDNA version 1.0	**PreGen Plus sDNA version 1.1**	**sDNA version 2.0**	**sDNA version 2.1**	**ColoSure sDNA version 2.2**	**Next-generation sDNA version 3.0†**
Market Availability	**Not implemented for clinical use**	**2003-2008 as a CLIA regulated LDT**	**Not implemented for clinical use**	**Not implemented for clinical use**	**2008-present as a CLIA regulated LDT**	**Not available†**
Test Details						
Markers*	21 point mutations in *APC*, *KRAS*, and *TP53* one microsatellite instability marker, *BAT-26* one Long DNA marker, DNA Integrity Assay (DIA)	Same 23 molecular markers as prototype (sDNA 1.0)	vimentin methylation point mutations in *APC* and *KRAS*	vimentin methylation DIA	vimentin methylation	Methylation markers (2-4 targets, details unknown) 7 point mutations *KRAS* exon 2 Also includes Fecal Immunohistochemical Test (FIT)
Evidence						
Test development and/or initial validation	Ahlquist 2000[27] Tagore 2003[28] Calistri 2003[29] Brand 2004[30] Syngal 2006[31]	Whitney 2004[32] Olson 2005[33]	Itzkowitz 2007[34]	Itzkowitz 2008[35]	Chen 2005[18] Itzkowitz 2007[34]§ Itzkowitz 2008[35]§ Baek 2009[36]§ Li 2009[16] Zou 2010[37]	Expected 2011-2012
Test validation in target population	Imperiale 2004[14] Ahlquist 2008[13]		Ahlquist 2008[13]			Expected 2013

Stool DNA (sDNA); laboratory-developed test (LDT); Clinical Laboratory Improvement Amendments (CLIA); Laboratory-developed test (LDT); DNA integrity assay (DIA); Fecal immunohistochemical test (FIT)

*Full information on genes can be found at http://www.ncbi.nlm.nih.gov/gene

†via personal communication with Exact Sciences

‡FDA submission for pre-market approval or clearance planned for late 2012

§Studies addressed multiple markers but included data on vimentin as an individual marker

Table 2. Diagnostic accuracy of fecal DNA testing in screening populations

Author, year	CRC prevalence	Test	Test positivity	Completion rate		Sensitivity (95% CI)	Specificity (95% CI)
Ahlquist, 2008[13]	0.01% (19/3764)	SDT-1 (prototype sDNA version 1.0)	5.2% (129/2497)	98.2% (3766/3834)	CRC	25% (5-57%)	NR
					Advanced adenomas	19% (5-42%)	NR
					CRC + advanced adenomas	20% (14-26%)	96% (95 to 97%)
		SDT-2 (sDNA version 2.0)	35% (77/217)	98.2% (3766/3834)	CRC	NR	NR
					Advanced adenomas	NR	NR
					CRC + advanced adenomas	40% (32-49%)	NR
Haug, 2007[15]	1.6% (NR)	*KRAS* testing	8% (70/875)	NR	CRC	0% (NR)	NR
					Advanced adenomas	0% (NR)	NR
Imperiale, 2004[14]	0.7% (31/4404)	SDT-1 (prototype sDNA version 1.0)	8.2% (205/2505)	88.3% (4845/5486)	CRC	51.6% (34.8 to 68.0%)	92.4% (NR)
					Advanced adenomas	15.1% (12.0 to 19.0%)	Not calculated
					CRC + advanced adenomas	17.7% (NR)	93.8% (NR)
		Hemoccult 2	5.8% (146/2505)	92.2% (5060/5486)	CRC	12.9% (5.1 to 28.9%)	94.3% (NR)
					Advanced adenomas	10.7% (8.0 to 14.1%)	Not calculated
					CRC + advanced adenomas	10.8% (NR)	95.2% (NR)

CRC: colorectal cancer; NR: not reported; SDT-1: sDNA version 1.0; SDT-2: sDNA version 2.0

Table 3. Limitations and quality concerns for diagnostic accuracy studies of fecal DNA testing

Author, year	Quality rating	Quality concerns	Applicability concerns
Ahlquist, 2008[13]	SDT-1: Fair SDT-2: Poor FOBT: Poor	Small sample size for SDT-2 with limited sampling of controls, authors tried to weight sensitivity for proportion of screen relevant neoplasia in the entire population, but did not presented weighted adjustment for all outcomes Poor precision around outcome measures Subset of patients did not get instructions on dietary restrictions required for FOBT, very low sensitivities reported for FOBT which are not consistent with best known estimates	Mostly White patient population (in comparison to general US population) Neither SDT-1 or SDT-2 were ever available for clinical use and both are very different tests compared to currently available (and soon to be available) testing
Haug, 2007[15]	Poor	Application of reference standard was opportunistic (patient who got colonoscopy were referred for colonoscopy) Average time between index and reference tests not presented, patients had to have colonoscopy within 2 years	Unclear how patient selection was performed, n eligible not reported Higher CRC prevalence in patients analyzed, higher percent of patients with first degree relative with CRC in n analyzed than full study population
Imperiale, 2004[14]	Fair	Analysis focused on subset of patients, only basic demographic data presented detailing differences between full cohort and analyzed subset Poor precision around outcome measures Very low sensitivities reported for FOBT which are not consistent with best known estimates	Exclusion of 20% of enrolled study population due to incomplete testing, characteristics for excluded persons not reported, n eligible not reported Persons 65 years of age and over were disproportionately represented in the study population Test evaluated was never available for clinical use and is a very different test compared to currently available (and soon to be available) testing

CRC: colorectal cancer; FOBT: fecal occult blood test; SDT-1: sDNA version 1.0; SDT-2: sDNA version 2.0

Table 4. Analytic validity of fecal DNA testing

Author, year	Experiment aim	Outcomes	Quality concerns	Applicability concerns
Li, 2009[16]	To test methyl-BEAMing in the detection of methylated vimentin DNA in plasma and stool from CRC patients	Lower limit of detection: 0.1% (1/1000 copies) methylated DNA detected using methyl-BEAMing versus no detection <6.2% without methyl-BEAMing	Poor: Small sample size (n=1 series of dilution) and poor reporting, unclear if experiments were repeated and results replicated	Mostly performed in plasma samples not stool samples Methyl-BEAMing method does not appear to be used in assay studied (KQ2) or currently available testing
		Accuracy (compared to next-generation sequencing): enumeration of methylation by methyl-BEAMing (0.018%) and reference standard (0.015%) in cancer cell lines; enumeration of methylation by methyl-BEAMing (10.8%) and reference standard (11.35%) in stool sample ("substantiated in 3 other samples")	Poor: Small sample sizes, unclear if experiment in cancer cell lines repeated and results replicated; experiment in stool samples (n=5), results only appear to be reported for 4 of 5 samples	
Zou, 2007[17]	To test whether method using methyl-binding domain (MBD) could increase assay sensitivity for detecting methylated markers in stool	Lower limit of detection (in stool with cell line DNA added): methylated vimentin was detectable in stool aliquots to which 10 and 50 ng cancer cell line DNA, but not those with 0 and 2 ng using MBD enrichment; versus not detectable in any stool aliquot without MBD enrichment	Poor: Small sample size (n=1 series of dilution), unclear if experiments were repeated and results replicated	Unknown if MBD column is used in assay studied (KQ2) or currently available testing
		Lower limit of detection (in stool from CRC patients): methylated vimentin was detected in 4 CRC stool samples (4-832 ng human DNA), but not detected in the other 4 samples (0.5-10 ng human DNA) using MBD enrichment; versus only 1 CRC stool sample (832 ng human DNA) without MBD enrichment	Poor: Small sample size (n=8)	
Chen, 2005[18]	To test the technical limits to the sensitivity of assay of methylated vimentin	Lower limit of detection (in normal mucosa with cell line DNA added): PCR could detect as little as 25-50 pg of methylated DNA in the presence of a 500- to 1000- fold excess of normal mucosal DNA	Poor: Small sample size (n=1 series of dilution), unclear if experiments were repeated and results replicated	Not conducted in stool samples

Table 5. Patient preferences and acceptability of fecal DNA testing

Author, year	Study aim	Study design N participants	Outcomes	Quality concerns	Applicability concerns
Marshall, 2009[23]	To compare patient and physician preferences about CRC screening tests	Cross-sectional survey N=1588 patients N=200 physicians	Patients' test preferences: non-invasive, do not require repeated measurements over time, no pain, no preparation, no complications, and high accuracy Physicians' test preferences: change in sensitivity from 40 to 90%, pain, process, specificity, complication risk, preparation, and testing frequency	Fair: response rate not reported	Financial compensation given for survey; FITs were not included as a screening option
		Model	Patients' preferred tests: fecal DNA, colonoscopy and CT colonography Physicians' prediction of patient's preferred tests: colonoscopy, CT colonography, and fecal DNA	Poor: lack of reporting about model inputs, lack of inclusion of all relevant testing (i.e., FIT), no sensitivity analyses around important model inputs	
Marshall, 2007[22]	To assess patient preferences about CRC screening tests	Cross-sectional survey N=547	Patients' test preferences: non-invasive, no preparation, no pain, and high accuracy	Fair: 52% response rate	Canadian participants age 40-60 years old; CT colonography option is without bowel preparation (bowel prep is part of protocol in US based practice); FITs were not included as a screening option
		Model	Relative importance of test preferences (most to least important): sensitivity, specificity, preparation, process, pain Preferred tests (most to least preferred): CT colonography, colonoscopy, double contrast barium enema, flexible sigmoidoscopy, fecal DNA, FOBT	Poor: lack of reporting about model inputs, incorrect model inputs (CT colonography without bowel preparation), lack of inclusion of all relevant testing (i.e., FIT), no sensitivity analyses around important model inputs	
Schroy, 2007[21]	To assess patient preferences about CRC screening tests	Cross-sectional survey N= 263	Test preferences (most to least important): accuracy, frequency, discomfort, time, complications, preparation, need for follow-up testing Preferred tests (most to least preferred): colonoscopy, fecal DNA, FOBT, FOBT plus flexible sigmoidoscopy, flexible sigmoidoscopy, double contrast barium enema	Poor: response rate not reported; participants provided with incorrect (overestimated) information on fecal DNA test accuracy during educational counseling; willingness to pay outcome assessed, but cost of tests were not provided to participants during educational counseling	Participants were given financial compensation, FIT (and CT colonography) were not included as screening options

Table 5. Patient preferences and acceptability of fecal DNA testing (cont.)

Author, year	Study aim	Study design N participants	Outcomes	Quality concerns	Applicability concerns
Berger, 2006	To assess patients' screening experience with fecal DNA testing	Convenience survey N= 1211	Most of the survey respondents found fecal DNA testing easy to perform sample collection, obtain collection materials, and return specimen	Poor: 18% response rate, no relative outcomes in comparison to other screening tests	Participants all ordered fecal DNA testing kit (within first 2 years it was commercially available), 73% of respondents were less than 65 years
Schroy, 2005[19]	To compare patients' perceptions of fecal DNA, FOBT, colonoscopy	Cross-sectional survey of participants in diagnostic accuracy study N= 4042	Test preferences: colonoscopy was perceived more accurate than stool based tests but less favorable in terms of invasiveness, anxiety (around preparation and test), likeliness to repeat test; very small but statistically significant differences between fecal DNA and FOBT Preferred tests (most to least preferred): fecal DNA (45%), FOBT (32%), colonoscopy (15%), no preference (8%), $p<0.001$	Fair: 84% response rate, conclusions drawn on statistical significance (unclear clinical significance)	Participants in diagnostic accuracy study had to be adherent to testing and were given financial compensation; only FOBT and colonoscopy were evaluated as screening options

Introduction

Background

Prevalence and Disease Burden

Colorectal cancer (CRC) is the third most common cancer in men and women, with more than 141,000 new cases expected in the United States (US) in 2011. Approximately 50,000 deaths from CRC are expected to occur in 2011, making CRC the third leading cause of cancer deaths in the US.[1] Survival largely depends on tumor stage at the time of diagnosis. Patients with localized disease at diagnosis have a five-year survival rate of 90 percent. However, 5-year survival drops to 69 percent for those diagnosed with regionalized disease (cancer spread to regional lymph nodes) and to12 percent for those with distantly metastasized disease.[2] Incidence and mortality are 35 to 40 percent higher in men than women, and are highest in African American men and women, who have 20 percent greater incidence and 45 percent greater mortality than white patients.[1]

Incidence and mortality rates for CRC have declined over the past two decades.[3,4] This decrease has been partially attributed to the use of CRC screening tests that allow for early detection and treatment of cancer or precancerous colorectal polyps. Individuals at increased risk for developing CRC include those over 50 years of age and those with a history of inflammatory bowel disease, family history of the disease, or inherited familial syndromes such as familial adenomatous polyposis or hereditary non-polyposis CRC.[1] Lifestyle factors have also been linked to an individual's risk of developing CRC, including a diet high in red or processed meats, lack of exercise, smoking, heavy alcohol use, being overweight, and having type 2 diabetes.[1]

Adenoma to Colorectal Cancer Progression

CRC usually develops over a period of 10 to 15 years with the cancer beginning as a precancerous lesion, most commonly a polyp, although flat adenomas are increasingly recognized as an important precursor for CRC.[5,6] While adenomatous polyps or adenomas can develop into cancers, fewer than 10 percent will eventually progress to cancer.[1] In general, larger adenomas and those with greater dysplasia are more likely to progress to cancer.[7] Advanced adenomas is a composite term used to describe precancerous lesions most likely to progress into cancer. Although there is some variation in the exact definition, advanced adenomas generally refer to adenomas 1 cm or greater, or with villous components (tubulovillous or villous), or with high-grade or severe dysplasia.

Molecular events are involved in the initiation, promotion, and progression of CRC on many levels, including interactions between the patient's inherited (germ-line) genome and the tumor (somatic) genome.[8] Progressive genomic instability in colorectal tissues gives rise to cancer due to accumulating genetic alterations (including gene mutations and amplifications) and epigenetic alterations (including aberrant DNA methylation leading to gene inactivation) that transform healthy cells into carcinoma cells.[7] On the molecular level, there is a progression of specific genetic or epigenetic changes that lead to altered functions of proto-oncogenes and tumor suppressor genes that accompany cancer's progression from adenomatous polyp to invasive cancer. [8] These genetic and epigenetic changes are the basis for the role of fecal DNA testing for early detection of CRC.

Screening of Colorectal Cancer

Rationale and current practice

Multiple tests are clinically used to screen for CRC, these include stool based tests (e.g., guaiac based or immunohistochemical based fecal occult blood testing), endoscopy (e.g., flexible sigmoidoscopy or colonoscopy), and imaging tests (e.g., double contrast barium enema or CT colonography). The decrease in CRC incidence and mortality over the past two decades in the US corresponds to an increase in self-reported screening rates from less than 25 percent in the 1980s to about 52 percent in 2002 and about 65 percent in 2010.[1,3] Despite increases in CRC screening over time, screening rates remain below optimal. Multiple patient, clinician, and health care delivery factors have been found to negatively influence CRC screening, including low socioeconomic or educational status, lack of physician recommendation, and lack of insurance or limited access to health care.[9]

Most organizations agree that any CRC screening is better than no screening, and that the age to begin screening in adults at average-risk for CRC is 50 years old. Currently, most US guideline organizations, including the U.S. Preventive Services Task Force (USPSTF), agree that the recommended options in screening for CRC include: colonoscopy every 10 years; annual high-sensitivity guaiac fecal occult blood testing (FOBT) or fecal immunohistochemical testing (FIT); and flexible sigmoidoscopy every 5 years with or without fecal blood testing (FOBT or FIT).[10,11]

Some disagreement occurs between guideline organizations about screening interventions with less evidence to support their use. These tests include: computerized tomography (CT) colonography, double contrast barium enema (DCBE), and fecal or stool-based DNA testing.[10] In 2008, the USPSTF found that evidence was insufficient to recommend fecal DNA testing for CRC screening based on a systematic review of new and established CRC screening modalities.[5,11] However, the American Cancer Society (ACS), the U.S. Multi-Society Task Force (MSTF) on Colorectal Cancer, and the American College of Radiology (ACR) collectively recommended fecal DNA testing as an alternative screening method. This discrepancy between recommendations appears to be due to differences in evidence considered. The ACS-MSTF-ACR recommendation was based on lower-quality evidence that was excluded from the review conducted on behalf of the USPSTF, which has more stringent inclusion and quality criteria (e.g., case-control studies of screening accuracy or lack of a reference standard).[12] While the American College of Gastroenterology recognized that fecal DNA testing may offer an alternative form of CRC screening, they state that the preferred forms of screening include colonoscopy and FIT, noting the very limited evidence for fecal DNA testing.[13]

Evolution of fecal DNA testing for colorectal cancer screening

Unlike other stool-based screening tests that are designed to detect hemoglobin, fecal DNA tests are designed to detect molecular abnormalities in cancer or precancerous lesions that are shed into the stool. Molecular abnormalities in CRC that have served as the basis for screening tests have focused on three major genetic mechanisms: chromosomal instability due to abnormalities in mutational hotspots like *APC*, *KRAS*, and *TP53*; microsatellite instability (MSI) due to loss of function of mismatch repair genes that can result in accumulation of errors within the DNA sequence called microsatellites; and DNA methylation, an epigenetic alteration, in which promoter sites of genes are hypermethylated leading to suppression of gene transcription.[14] Although the presence of these alterations does not guarantee a progression to

cancer, it is thought that these molecular markers can identify the adenomas most likely to develop into cancer, in addition to early stages of CRC.[7]

Fecal DNA testing to screen for CRC has evolved over time. Some of the most common (and well studied) DNA markers in stool include mutational analysis of *APC*, *KRAS*, and *TP53;* methylation analysis of vimentin, *SFRP2*, *MGMT*, *MLH1;* and measurements of long-DNA integrity and microsatelite instability.[15] The feasibility of stool DNA testing was originally demonstrated using a single marker assay for *KRAS* in the early 1990s. Later work in 2000 led to the development of a panel of markers intended to detect both advanced adenomas and colorectal tumors. Since that time several configurations of multi-marker stool tests have been evaluated. Earlier studies focused on the Wnt signaling pathway and microsatellite instability, but these initial studies proved less successful than anticipated. More recently, studies have incorporated the detection of methylated markers, in recognition that gene hypermethylation is a more common pathway in CRC than previously understood.[14] Based on our audit of initial validation studies, the most commonly evaluated methylated markers appear to be vimentin and *SFRP2*. Other potentially useful methylated gene targets for fecal DNA testing include *TFPI2* and *NDRG4*, which are both tumor suppressor genes.[16] Due to the molecular heterogeneity of CRC, potential screening tests have generally considered a panel of markers rather than a single marker in an attempt to maximize clinical sensitivity.[17] Industry now believes that they have designed panels of markers that cover 100 percent of the target lesions at the tissue level, as compared to only 67 percent of screen-relevant neoplasms when the tissue samples were examined with the first generation of available testing.[18]

In addition to improvements in relevant marker identification, there have also been significant technological advances in the past several years to allow for improved detection of molecular abnormalities in DNA.[16] However, only 0.01 percent of DNA in the feces is of human origin; most fecal DNA is acquired through outside sources including diet and microflora. Therefore, isolating and detecting target human DNA from the stool presents a challenge for fecal DNA test methodologies.[19] Assay development has had to focus on improving the analytic sensitivity (or lower limit of detection) of test methodology and technology. Techniques have been developed to better preserve stool DNA (e.g., buffer to stabilize DNA) and extract DNA from stool. In addition, techniques to enrich target DNA by selective capture from stool followed by digital or emulsion PCR have been developed (e.g., BEAMing and digital melt curve analysis) and seem promising in improving assay sensitivity.[16,18]

Thus far a single company, Exact Sciences, has been the major manufacturer and commercial developer of fecal DNA testing in the US. Since developing their prototype, the manufacturer has marketed two tests, PreGen Plus (2003-2008) and ColoSure (the only commercially available test currently in the US) (Table 1). The prototype and the previously available test PreGen Plus included the same 23 molecular markers, whereas the newer versions only include methylation of vimentin plus or minus an assay for DNA integrity. Thus, the currently available test ColoSure shares no markers with the previously available test. In addition to this evolution in the composition of the test there have also been advances in pre-analytic and analytic technologies. Pre-analytic factors include specimen collection, processing, handling, and delivery to testing site. Analytic factors include test methods and performance of procedures, and monitoring and verification of accuracy and reliability of test results. The major pre-analytic advance was the addition of DNA stabilization buffer at the time of stool collection, which prevents the degradation of DNA while the stool is in transport and storage. The major analytic advances

included the use of technologies to isolate human DNA targets that improve the analytic sensitivity or lower limit of detection of these assays.

Table 1. Development of fecal DNA testing for colorectal cancer screening

	Prototype sDNA version 1.0	**PreGen Plus sDNA version 1.1**	**sDNA version 2.0**	**sDNA version 2.1**	**ColoSure sDNA version 2.2**	**Next-generation sDNA version 3.0†**
Market Availability	**Not implemented for clinical use**	**2003-2008 as a CLIA regulated LDT**	**Not implemented for clinical use**	**Not implemented for clinical use**	**2008-present as a CLIA regulated LDT**	**Not available†**
Test Details						
Genetic Markers*	21 point mutations in *APC*, *KRAS*, and *TP53* one microsatellite instability marker, *BAT-26* one Long DNA marker, DNA Integrity Assay (DIA)	Same 23 molecular markers as prototype (sDNA 1.0)	Vimentin methylation Point mutations in *APC* and *KRAS*	Vimentin methylation DIA	Vimentin methylation	Methylation markers (2-4 targets, details unknown) 7 point mutations *KRAS* exon 2
Non-genetic measures	None	None	None	None	None	Fecal Immunohistochemical Test (FIT)
Advances in pre-analytic factors	Specimen homogenization for target uniformity in aliquots	Stabilizing buffer at time of stool collection	Stabilizing buffer at time of stool collection	Stabilizing buffer at time of stool collection	Stabilizing buffer at time of stool collection	Stabilizing buffer at time of stool collection
Advances in analytic factors	Bead based human DNA target hybrid capture from resolubilized, precipitated total DNA	Gel-capture method for isolating DNA targets from resolublized, precipitated total DNA	Bead based human DNA target hybrid capture from resolublized, precipitated total DNA	Bead based human DNA target hybrid capture from resolublized, precipitated total DNA	Bead based human DNA target hybrid capture from resolublized, precipitated total DNA	Direct bead based DNA target hybrid capture from stool homogenate supernatant QuARTS® target and signal amplification method Multiplexed target assays Automated analytic steps, high through-put

Table 1. Development of fecal DNA testing for colorectal cancer screening (cont.)

	Prototype sDNA version 1.0	PreGen Plus sDNA version 1.1	sDNA version 2.0	sDNA version 2.1	ColoSure sDNA version 2.2	Next-generation sDNA version 3.0†
Market Availability	**Not implemented for clinical use**	**2003-2008 as a CLIA regulated LDT**	**Not implemented for clinical use**	**Not implemented for clinical use**	**2008-present as a CLIA regulated LDT**	**Not available‡**
Evidence						
Test development and/or initial validation	Ahlquist 2000[20] Tagore 2003[21] Calistri 2003[22] Brand 2004[23] Syngal 2006[24]	Whitney 2004[25] Olson 2005[26]	Itzkowitz 2007[27]	Itzkowitz 2008[28]	Chen 2005[29] Itzkowitz 2007[27]§ Itzkowitz 2008[28]§ Baek 2009[30]§ Li 2009[31] Zou 2010[32]	Expected 2011-2012
Test validation in target population	Imperiale 2004[33] Ahlquist 2008[34]		Ahlquist 2008[34]			Expected 2013

Stool DNA (sDNA); laboratory-developed test (LDT); Clinical Laboratory Improvement Amendments (CLIA); Laboratory-developed test (LDT); DNA integrity assay (DIA); Fecal immunohistochemical test (FIT)

*Full information on genes can be found at http://www.ncbi.nlm.nih.gov/gene

†via personal communication with Exact Sciences

‡FDA submission for pre-market approval or clearance planned for late 2012

§Studies addressed multiple markers but included data on vimentin as an individual marker

Only one fecal DNA test for the detection of adenomas and colorectal tumors is currently commercially available. This test, ColoSure, developed by Exact Sciences and distributed by LabCorp is approved as a direct-to-consumer test regulated by the Centers for Medicare and Medicaid Services under the Clinical Laboratory Improvement Amendments (CLIA) of 1988. Marketing for commercially available fecal DNA testing specifies that the test is intended for individuals who are not eligible (either unable or unwilling) for more invasive CRC screening (i.e., colonoscopy, flexible sigmoidoscopy, or CT colonography).[35] As a laboratory-developed ("home-brewed") test, ColoSure is not subject to regulation by the U.S. Food and Drug Administration (FDA) and has not obtained FDA clearance or approval. Currently, there are no fecal DNA tests approved by the FDA for screening or diagnosing of CRC. Historically, the FDA's oversight of genetic testing has been focused on commercial test kits. The FDA, however, is now engaged in dialogue with manufacturers and the public on how it should develop a consistent, reasonable, and fair approach for laboratory-developed tests, to ensure safety and promote innovation.[36]

A new fecal DNA test from Exact Sciences is projected to be available in 2012 (Table 1). Although the actual markers are not known, it is clear that the molecular markers will be different from the current test version and will include an immunohistochemical assay for hemoglobin.[37] It is yet unclear if this fecal immunohistochemical test (FIT) is similar or different from other currently available FITs.

Changes in markers and assay technology are extremely important to understand when evaluating the evidence base for fecal DNA testing because over time assays have included different markers and used different technologies, potentially limiting the applicability of the existing evidence base to currently (and soon to be) available testing.

Scope and Purpose

This topic was nominated to the Agency for Healthcare Research and Quality for its Effective Healthcare (EHC) Program by an organization interested in using a review to develop an evidence-based recommendation statement. The proposed Key Questions (KQs) and the Analytic Framework were posted for public comment on the EHC Program Web site from February 7, 2011, through March 7, 2011. No changes to the KQs or Analytic Framework were made on the basis of the public comments. The draft protocol was revised after review by a Technical Expert Panel (TEP). This review aims to synthesize the evidence on fecal DNA testing to screen for CRC in average risk adults.

Key Questions

Six systematically reviewed questions are addressed in this report. These questions address the clinical utility (evidence for impact on patient health outcomes), clinical validity (diagnostic accuracy for CRC or precancerous lesions), analytic validity, acceptability (and adherence), and harms of fecal DNA testing to screen for CRC.

Question 1: Clinical utility.

What is the effectiveness of fecal DNA testing (alone or in combination with other screening tests) to screen for colorectal cancer in reducing *morbidity* (colorectal cancer incidence) or *mortality* (all-cause or CRC-specific)?

Question 2: Clinical validity.

2.1. What are the absolute test-performance characteristics (e.g., sensitivity, specificity) of fecal DNA testing for CRC screening, as compared to colonoscopy?
   a. To detect CRC?
   b. To detect precancerous lesion(s)?

2.2. What is the relative test performance of fecal DNA testing as compared to other established screening modalities in current practice?
   a. To detect CRC?
   b. To detect precancerous lesion(s)?

Question 3: Interval of Screening.

What is the test performance of fecal DNA testing across different screening interval(s)?

Question 4: Analytic Validity.

4.1. What is the analytic validity (analytic sensitivity, specificity, and reproducibility) of currently available fecal DNA assays?

4.2. What are the important analytic and pre-analytic factors that can affect fecal DNA assay validity?

Question 5: Acceptability of Testing.

What is the acceptability and adherence of fecal DNA screening in comparison to other stool-based screening tests, or in comparison to more invasive modalities of screening?

Question 6: Harms.

What are the potential harms of fecal DNA testing?

Methods

The Agency for Healthcare Research and Quality (AHRQ) requested a comparative effectiveness review on the use of fecal DNA analysis in screening for CRC as part of its Effective Health Care (EHC) program. This Evidence-based Practice Center (EPC) was assigned this review and subsequently established a review team, developed a review protocol, conducted the review, and drafted a report summarizing the review's findings.

Topic Development and Refinement

This EPC developed this topic for consideration for a systematic review based on a public nomination submitted to the AHRQ EHC program. For the topic development phase, we prepared a topic brief that provided a scan of the evidence and contextual details addressing the EHC program prioritization criteria. The topic prioritization group from the EHC program evaluated the appropriateness, importance, feasibility, desirability, and potential and relative value and recommended a Comparative Effectiveness Review.[38]

During the public review of the proposed Key Questions, several individuals expressed concern about the optimal timing of this review due to the development and ongoing research on a new fecal DNA screening test. Despite these comments, it was felt that a review would still be helpful to stakeholders before the availability of newer testing. After developing the proposed review protocol, a Technical Expert Panel (TEP) was convened to help refine the draft protocol. Discussions among the EPC, AHRQ, and TEP members occurred during two teleconferences and via e-mail. In addition, input from the TEP during the conduct of the review was sought to help address content about the evolution of fecal DNA testing. The TEP were not otherwise involved in the conduct of the review or writing of the report.

Analytic Framework

We developed an Analytic Framework to illustrate the relationship between the Key Questions addressed in our review (Figure 1).

Figure 1. Analytic Framework of the benefits and harms of Fecal DNA Testing in Screening for Colorectal Cancer

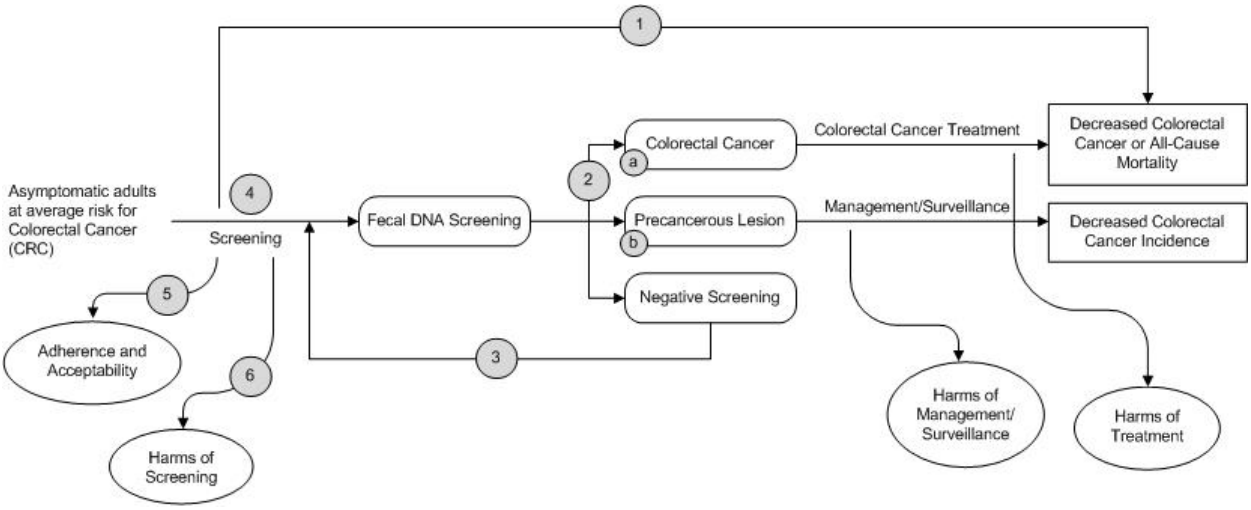

Literature Search Strategy

We performed comprehensive literature searches in the following databases: MEDLINE, Cochrane Database of Systematic Reviews, Cochrane Central Register of Controlled Trials, Database of Abstracts of Reviews of Effects, and the Health Technology Assessments Database. Searches were limited to the English language, from 2000 through March 2011. See Appendix A for complete search string. Searches of these databases were supplemented with manual searching of reference lists of relevant review articles and suggestions made by TEP members.

In addition to a search of the published literature, we also performed a focused search of the grey literature. For the purposes of this review, grey literature comprised information that was not controlled by commercial publishing, including: unpublished data from recent (2009–2011) conference abstracts (e.g., American Association for Cancer Research, American Association for Clinical Chemistry, American College of Gastroenterology, American Society of Clinical Oncology, Digestive Disease Week, Gastrointestinal Cancers Symposium), regulatory documents (e.g., FDA Medical and Statistical Reviews; Authorized Medicines for the European Union), proprietary data submitted via manufacturer, and information regarding ongoing and future research via clinical trial registry entries (e.g., ClinicalTrials.gov and WHO Clinical Trials). Additional unpublished literature was sought via a Scientific Information Packet (SIP) request to Exact Sciences (the developer of the only currently available fecal DNA test).

The results of the searches were downloaded and imported into version 11.0.1 of Reference Manager (Thomson Reuters, New York, NY), a bibliographic management database.

Process for Study Selection

The results of the electronic literature searches, hand searches, and TEP suggested literature were screened using a two-step process for study selection. Abstracts were screened independently by two reviewers against a set of *a priori* inclusion criteria developed in consultation with the TEP (Table 2). We restricted included populations to persons at average-

risk for CRC. We excluded case-control studies and cohorts in high-risk patients as this study design and distorted selection of patients has been shown to overestimate sensitivity.[39,40] Because of a paucity of included studies to address Key Questions 1 and 2, we did identify and examine the excluded case-control or cohort studies in high-risk patients. We included studies conducted in any setting, but limited the acceptable studies for analytic validity to tests currently available to patients. We also limited the literature to English language only beginning in 2000, which our TEP confirmed would capture the relevant literature. Full-text articles of abstracts meeting inclusion criteria were retrieved and again, dual-reviewed against the inclusion criteria. Disagreements were resolved through consultation with a third reviewer. Reviewers were not masked to the study authors, institution, or journal. Excluded articles can be found with the reason for exclusion in Appendix B.

Table 2. Inclusion criteria

Category	Inclusion Criteria
Population	KQs 1-6: Adults ≥40 years old at average risk for CRC. We will exclude studies that exclusively include adults who are at high-risk for CRC and those diagnosed with CRC. Persons at high risk for CRC include persons with a strong family history of CRC including syndrome-related elevated risks (e.g., FAP, HNPCC).
Interventions	KQs 1-6: Fecal assays intended to screen for CRC, through early cancer or precancerous lesions identification by DNA testing including genotyping, gene-expression measurement, and/or methylation detection. Fecal DNA tests may be performed alone or in combination with other CRC-screening tests. KQ 4: Tests will be limited to those that are currently available to patients, because the assay technology has changed significantly over time.
Comparator	KQ 1: No screening or another established CRC-screening modality (colonoscopy, FOBT [high-sensitivity or traditional], FIT, flexible sigmoidoscopy, barium enema, or CT colonography). KQ 2: For absolute test performance: colonoscopy alone or supplemented by another test. For relative test performance: any established CRC-screening modality. KQ 5: Any established CRC-screening modality.
Outcomes	KQ 1: CRC incidence (or advanced neoplasia incidence if CRC incidence is not reported), all-cause mortality, and CRC-specific mortality. KQs 2 & 3: Absolute or relative test-performance measures, including sensitivity, specificity, PPV, NPV, or relative detection rate: For detection of CRC (adenocarcinoma, carcinoma in situ). For adenomas (any histology). For advanced neoplasia, which is a composite outcome including adenocarcinoma, adenomas with high grade dysplasia or villous histology, and adenomas 1 cm or greater in diameter. KQ 4: Analytic sensitivity (lower limit of detection), analytic specificity, and reproducibility. KQ 5: Any self-reported or objective measures of patient acceptability of or patient adherence to fecal-DNA screening. KQ 6: Any reported harms, including test inaccuracy (i.e., false-positive or false–negative results), and negative psychological, ethical, legal, or social consequences.
Time Period	KQs 1–6: 2000–present.
Setting	KQs 1–6: All settings.
Study Geography	KQs 1–6: All locations.

Publication Language	KQs 1–6: English only.
Study Design	KQs 1–2: Systematic review, randomized or nonrandomized controlled trial, prospective or retrospective cohort, diagnostic accuracy studies. KQs 3–6: Any study design.
Followup Duration	KQs 1–6: We did not exclude studies based on duration of followup. Timing of application of reference-standard testing will be considered as part of the quality assessment.
Sample Size	KQs 1–6: We did not exclude studies based on sample size alone, although it may be considered as part of the quality assessment.

Grey literature findings were initially reviewed by one reviewer and confirmed by a second reviewer. While grey literature sources were selected using the same eligibility criteria used for the published literature, the timeframe for conference abstracts was condensed to 2009-2011.

Data Abstraction and Data Management

Data from all included studies were abstracted into standardized evidence tables in Microsoft Excel by one reviewer and checked for accuracy and completeness by a second reviewer. Separate abstraction forms were created for key questions related to clinical utility/validity, analytic validity, and acceptability/adherence. The following information was extracted from each study, where applicable: author identification, year of publication, source of study funding, study design characteristics, recruitment setting/patient-inclusion criteria, sample size, and setting; important study population characteristics (e.g., age, race, sex); and fecal DNA test and comparator test (reference standard) characteristics, and all relevant outcomes. We recorded details relevant to the technical specification of the fecal DNA assay being conducted, including the gene mutations/expression analyzed, the assay characteristics and laboratory setting, and the technique used for sample analysis.

For excluded case-control or cohort studies in high-risk patients, we abstracted the markers examined, the study aim, the sample sizes, and outcomes. A higher level summary of these studies is included in an excluded studies table.

Individual Study Quality Assessment

To assess the methodological quality of included studies, we applied the study design-specific quality criteria of the U.S. Preventive Services Task Force.[41] We supplemented these quality criteria with methods from the Evaluation of Genomic Applications in Practice and Prevention Working Group (specific to genetic testing),[42] the Newcastle Ottawa Scale (specific to cohort studies),[43] and the QUADAS criteria (specific to diagnostic accuracy studies).[44] Two independent reviewers assigned a quality rating of the internal validity for each study. Disagreements were resolved by discussion and consensus, or through consultation with a third reviewer. A rating of "good," "fair," or "poor" was assigned by using the predefined criteria for each study design. Good-quality studies generally meet all of the study design-specific quality criteria. Fair-quality studies do not meet all the criteria, but do not have any fatal flaws in study design. Poor-quality studies have significant flaws or lack of reporting that imply bias, affecting interpretation of study results. No articles were excluded for quality reasons.

Data Synthesis

We conducted qualitative syntheses of study results for each key question with included studies. Due to limited number of studies included for each key question and clinical differences

amongst studies, we did not conduct meta-analysis of results. For qualitative syntheses, we evaluated and summarize clinical and methodological characteristics of included studies, these included: number and characteristics of study participants, settings in which the study was conducted, specific fecal DNA test evaluated (and important test characteristics), outcomes assessed and statistical considerations of reported results. In our qualitative synthesis we also evaluated and summarize important internal (quality) and external (applicability) of studies, and how the validity affected confidence in interpretation of results. For details on quality and applicability please Individual Study Quality Assessment (above) and Applicability (below) sections. Results and limitations of studies are also summarized in tables for easy comparison across studies.

Grading the Strength of Evidence

The strength of evidence for primary outcomes was graded using the standard process of the Evidence-based Practice Centers as outlined in the *Methods Guide for Effectiveness and Comparative Effectiveness Reviews*.[45] The grade was based on four major domains: risk of bias, consistency, directness, and precision of the evidence. Grades were assigned for the bodies of evidence pertaining to each primary outcome: high, moderate, low, and insufficient (Table 3).[45]

Table 3. Strength of evidence grades and definitions

Grade	Definition
High	High confidence that the evidence reflects the true effect. Further research is very unlikely to change our confidence in the estimate of effect.
Moderate	Moderate confidence that the evidence reflects the true effect. Further research may change our confidence in the estimate of effect and may change the estimate.
Low	Low confidence that the evidence reflects the true effect. Further research is likely to change the confidence in the estimate of effect and is likely to change the estimate.
Insufficient	Evidence either is unavailable or does not permit a conclusion.

Applicability

We also assessed the applicability of studies. Judgments of applicability for each outcome were performed separately from assessments of the other domains of strength of evidence, as recommended.[46] Factors in individual studies that might affect applicability were abstracted, particularly including factors related to the populations studied (e.g., how highly selected they were [what portion of those eligible were included], how they were recruited) and if the fecal DNA assay is currently available or not (or how similar is the assay to currently available fecal DNA assays).

Results

Literature Yield

The literature search yielded a total of 324 citations from electronic database searches and outside sources (Figure 2). Based on the review of title and abstracts, we subsequently reviewed 33 full-text articles for their eligibility. We included 11 articles in total, three diagnostic accuracy studies that met inclusion criteria for Key Question 2, three analytic validity studies for Key Question 4, and five studies of acceptability or preference of testing for Key Question 5. Two studies for Key Question 2 also reported adherence to testing and therefore are discussed with Key Question 5 results. We found no studies that addressed clinical utility (Key Question 1), intervals of screening (Key Question 3), or specific harms of screening (Key Question 6).

Figure 2. Literature flow diagram

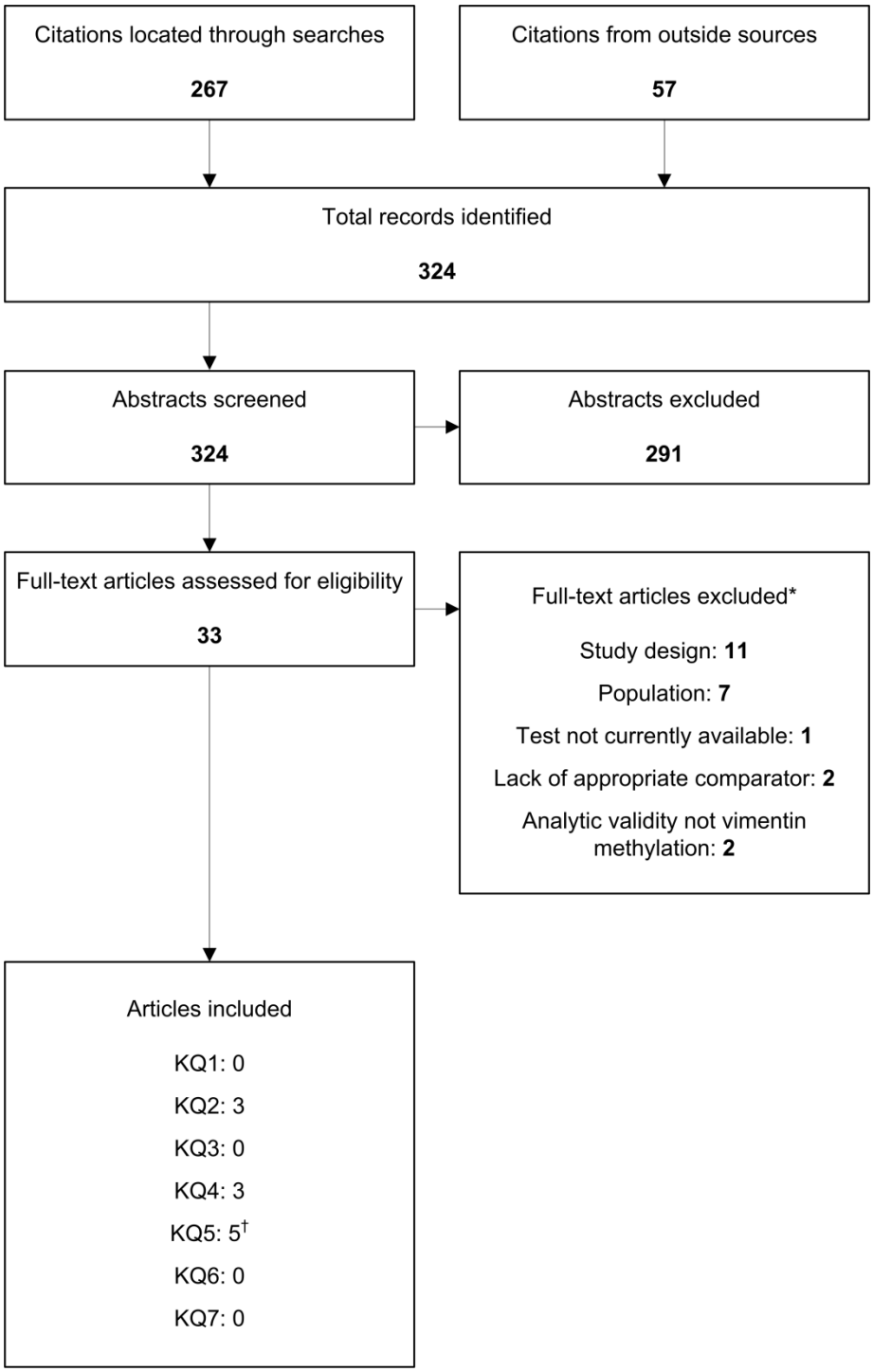

* 1 article was excluded for different reasons for different key questions
† 2 articles from KQ2 reported adherence to testing (and therefore are also discussed with KQ5)

Results of Included Studies

Key questions 1 to 3. Benefits of fecal DNA testing

We found no studies that evaluated the effectiveness of fecal DNA screening on CRC incidence or mortality, alone or in combination with other screening tests (Key question 1). We found three fair- to poor-quality studies in screening populations (n=5662) that evaluated the absolute test performance of fecal DNA testing for CRC screening, compared to colonoscopy (reference standard).[33,34,47]Two of these studies also concomitantly evaluated guaiac based fecal occult blood testing (FOBT) (Key Question 2).[33,34] We found no studies that evaluated the test performance of fecal DNA testing across different screening intervals (Key Question 3). We excluded 64 initial test-validation studies that were not conducted in screening populations, the majority of which were case-control studies in patients with CRC and healthy controls. Only three of these 64 studies were conducted in high-risk cohorts (Table 4). Six of the excluded case-control studies evaluated vimentin methylation independently, which is the basis for the only commercial fecal DNA test currently available (Table 1).

Despite the availability of numerous initial validation studies of fecal DNA testing, we found only three studies that examined the test accuracy of fecal DNA testing in screening populations.[33,34,47] In summary, two fair- to poor-quality diagnostic accuracy studies in screening cohorts of average-risk patients undergoing colonoscopy have evaluated multi-marker fecal DNA testing (two different versions) by Exact Sciences.[33,34] The third poor-quality study was a smaller cohort study evaluating the test accuracy of *KRAS* mutations.[47] Due to the evolution of fecal DNA tests, none of these studies evaluate tests currently on the market. Two studies (n analyzed=5004) evaluated a multi-marker fecal DNA test that was a prototype to a later version that was clinically available as PreGen Plus.[33,34] These two studies found different sensitivities to detect CRC (25 percent versus 51.6 percent), although the confidence intervals overlapped. There were some differences in study population, but it is unclear if these differences should affect test performance. Sensitivities for advanced adenomas were very low in both studies. A smaller (n=217) subset analysis evaluating a different multi-marker fecal DNA test and a smaller (n=441) study evaluating a single marker (*KRAS*) were both poor quality.

Table 4. DNA markers evaluated in excluded studies focusing on test development and/or initial validation of fecal DNA testing for colorectal cancer, studies in reverse chronological order

Author (RM#)	Year	Mutations†	Methylation†	Other†‡
Case control studies				
Tang[48]	2011		*SFRP2*	
Zhang[49]	2011	*KRAS*		
Ahlquist[50]*	2010	*KRAS*	*BMP3, TFPI2, NDRG4,* vimentin	
Azuara[51]	2010		*RARB, CDKN2A, MGMT, APC*	
Chang[52]	2010		*ITGA4, SFRP2, CDKN2A*	
Hussain[53]*	2010	BRAF		
Kalimutho[54]	2010	APC		DIA
Kisiel[55]*	2010	*TP53, APC, KRAS, BRAF, PIK3CA*	*EYA4,* vimentin	
Zou[32]*	2010		vimentin	
Baek[30]	2009		*MGMT, MLH1,* vimentin	
Bosch[56]*	2009		*PHACTR3*	
Calistri[57]	2009			DIA
Cretella[58]*	2009	*APC, KRAS, BRAF, TP53*		DIA
Glockner[59]	2009		*TFPI2*	
Hellebrekers[60]	2009		*GATA4, GATA5*	
Kim[61]	2009		*OSMR, SFRP1, B4GALT1*	
Li[31]	2009		vimentin	
Mayor[62]	2009		*EN1* CpG island	
Melotte[63]	2009		*NDRG4*	
Nagasaka[64]	2009		*RASSF2, SFRP2*	
Zou[65]*	2009			DIA
Zou[66]*	2009	TP53, *KRAS*, APC, CDH1, *CTNNB1*, BRAF, SMAD4, *CDKN2A*		
Zou[67]	2009	*KRAS*, APC, BRAF, *TP53*		
Zou[68]*	2009	*KRAS*, APC	*BMP3*	
Itkowitz[28]	2008		vimentin	DIA

Table 4. DNA markers evaluated in excluded studies focusing on test development and/or initial validation of fecal DNA testing for colorectal cancer, studies in reverse chronological order (cont.)

Author (RM#)	Year	Mutations†	Methylation†	Other†‡
Case control studies				
Oberwalder[69]	2008		*SFRP2*	
Onouchi[70]	2008	*APC, KRAS, TP53*		
Wang[71]	2008		*SFRP2*	
Abbaszadegan[72]	2007		*CDKN2A*	DIA, MSI (*BAT-26*)
Abbaszadegan[73]	2007	*TP53*		
Huang[74]	2007		*SFRP2*	
Huang[75]	2007		*SFRP2, TMEFF2, MGMT*	
Itkowitz[27]	2007	*KRAS, TP53, APC*	vimentin, *HLTF*	DIA
Leung[76]	2007		*APC, ATM, MLH1, SFRP2, HLTF, MGMT, GSTP1*	
Onouchi[77]	2007	*TP53, KRAS, APC*		
Rennert[78]	2007	*KRAS*		
Zou[79]	2007		vimentin	
Zhang[80]	2007		*SFRP1*	
Jin[81]	2006	*BRAF, KRAS*		MSI (*BAT-26*)
Zou[82]	2006			DIA
Chen[29]	2005	*APC*		DIA, MSI (*BAT-26*)
Lenhard[83]	2005	*HIC1*		
Matsushita[84]	2005	*APC, KRAS, TP53*		
Petko[85]	2005		*MGMT, CDKN2A. MLH1*	
Belshaw[86]	2004		*ESR1, MGMT, TMEFF2, CDKN2A, APC, MLH1*	
Calistri[87]	2004			DIA
Leung[88]	2004		*APC, ATM, HLTF, MGMT, MLH1, GSTP1*	
Muller[89]	2004		*SFRP2*	
Wan[90]	2004	*KRAS*		
Whiney[25]	2004	*KRAS, TP53, APC*		DIA, MSI (*BAT-26*)

Table 4. DNA markers evaluated in excluded studies focusing on test development and/or initial validation of fecal DNA testing for colorectal cancer, studies in reverse chronological order (cont.)

Author (RM#)	Year	Mutations†	Methylation†	Other†‡
Case control studies				
Boynton[91]	2003			DIA
Calistri[22]	2003	*TP53, KRAS, APC*		MSI (*D2S123, D5S346, D17S250, BAT-25, BAT-26*)
Tagore[21]	2003	*APC, TP53, KRAS*		DIA, MSI (*BAT-26*)
Ito[92]	2002	*KRAS*		
Koshiji[93]	2002			LOH (*APC, TP53, DCC, MLH1, D9S162, D9S171, IFNA*)
Nishikawa[94]	2002	*KRAS*		
Traverso[95]	2002	*APC*		
Traverso[96]	2002			MSI (*BAT-26*)
Doolittle[97]	2001	*KRAS*		
Rengucci[98]	2001	*TP53, KRAS*		MSI (*D2S123, D5S346, D17S250, BAT-25, BAT-26*)
Ahlquist[20]	2000	*KRAS, TP53, APC*		MSI (*BAT-26*), DIA
Cohort studies in high risk patients				
Kalimutho[99]	2011			DIA
Calistri[100]	2010			DIA
Puig[101]	2000	*KRAS*		

DNA integrity assay (DIA); Loss of heterozygosity (LOH); Microsatellite instability (MSI)
*Conference abstract only
†Full information on genes can be found at http://www.ncbi.nlm.nih.gov/gene
‡Full information on microsatellite markers can be found at www.genome.ucsc.edu

The most recent study by Ahlquist and colleagues published in 2008 was an manufacturer-funded diagnostic accuracy study conducted in a large cohort (n enrolled=4482) of 50 to 80 year olds at average risk for CRC (Table 5).[34] Due to cancellations, protocol violations, incomplete colonoscopy or incomplete stool samples, 718 persons (16 percent) were excluded, thus 3764 participants were included in the analysis. Based on limited characteristics (i.e., age, sex, and race/ethnicity), included participants did not appear to be different from the overall enrolled study population. The study evaluated a pre-commercial stood DNA test (SDT-1, pre-commercial version of PreGen Plus), which was subsequently changed during the study to a different multi-marker panel (SDT-2). After reviewing interim results on the first 2497 participants, it was decided to implement a newer test, SDT-2. The next 1267 participants were part of a case-control study design in which the SDT-2 test was run on a subset of patients (n analyzed=217). This subset included all cancers (n=19), high-grade dysplasia (n=20), adenomas ≥ 2 cm (n=53), a random subset of 1-2 cm adenomas (n=50), and normal controls (n=75). All participants received a colonoscopy for validation of CRC-related findings. SDT-1 was a multi-target fecal DNA test that included 21 mutations in the *KRAS*, *APC*, and *TP53* genes, along with markers for microsatellite-instability (MSI) and long DNA. SDT-2 was a different multi-target fecal DNA test that included mutations in the *KRAS*, *APC* genes as well as vimentin gene methylation. Guaiac-based FOBT, both Hemoccult II and Hemoccult Sensa, were concomitantly evaluated. Only a subset of patients, however, were advised about dietary and medication restrictions. Therefore, results reported for FOBT (n=3764) are problematic and not discussed further in the results. Test performance outcomes for SDT-1 were rated fair quality despite reporting of an unplanned interim analysis as the final results. However, test performance outcomes for SDT-2 were rated poor quality.

The cohort for SDT-1 evaluation (n analyzed=2497) had a mean age of 60.4 years, were 46.0 percent male, 92.7 percent white (Table 5). Overall test positivity was 5.2 percent. The sensitivity for one-time fecal DNA testing with SDT-1 was 25 percent (95% CI, 5 to 57 percent) for CRC, 19 percent (95% CI, 5 to 42 percent) for advanced adenomas and 20 percent (95% CI, 14 to 26 percent) for CRC and advanced adenomas. Specificity for any CRC or advanced adenomas was 96 percent (95% CI, 95 to 97 percent) (Table 6). The subset who were included in the SDT-2 evaluation (n analyzed=217) were generally older than those evaluated in the overall cohort (mean age 66.4), 50.2 percent male and 92.6 percent white (Table 5). Because only a selected subset of persons had SDT-2 testing, overall test positivity was artificially elevated, 35 percent. Weighted sensitivity for one-time fecal DNA testing with SDT-2 was 40 percent (95% CI, 32 to 49 percent) for detection of CRC and advanced adenomas, which was twice the sensitivity of SDT-1 (Table 6). Unfortunately, weighted sensitivities for CRC alone or advanced adenomas are not reported. Although specificity was not reported, 16 percent of patients with normal colonoscopy had an abnormal SDT-2 result, and 26 percent of patients 65 years or older with a normal colonoscopy had an abnormal SDT-2 result. Thus, enhanced sensitivity with SDT-2 likely had a cost in terms of decreased specificity.

In general, the strength of this study was that it was a large cohort in an average-risk screening population, which recruited from 22 academic and regional health care systems. However, important study limitations impact our ability to interpret the results for SDT-2 test performance; including the small sample size, exclusion of all patients with protocol violations, inadequate samples, or colonoscopy, limited sampling of controls despite weighting sensitivity for proportion of screen relevant neoplasia in the entire population, and inability to accurately estimate test specificity (Table 7). Although the lack of adherence to dietary and medication

restrictions should, in theory, not decrease sensitivity of FOBT, given the very low sensitivities reported in this study (as compared to other, more generally accepted, estimates for Hemoccult II and Hemoccult Sensa),[102] the quality and applicability of all FOBT test results are questionable. In addition to concerns about the generalizability of the cohort studied (i.e., inclusion of a mostly White population, n eligible not reported), the single most important limitation is that neither SDT-1 or SDT-2 were ever available for clinical use and are both different from the currently available test ColoSure.

The study by Imperiale and colleagues was another manufacturer-funded fair-quality large cohort study (n included=4404) evaluating the same pre-commercial stool DNA test (SDT-1, pre-commercial version of PreGen Plus) as was evaluated in the study by Ahlquist and colleagues (Table 5).[33] In this study, researchers compared SDT-1 with 3-card non-rehydrated Hemoccult II average-risk, asymptomatic patients who all underwent colonoscopy. Of the 5486 enrolled participants, 1082 (20 percent) were excluded due to incomplete testing. Baseline characteristics for enrolled participants were not reported in comparison with included participants. About 50 percent more patients (641 vs. 426) did not provide an adequate sample for fecal DNA testing as compared to Hemoccult II, which may signal differences in feasibility or acceptability to patients. Although all included patients had colonoscopy and Hemoccult II testing, only a subset received SDT-1 testing. A subset (n=2507) of the 4404 that completed testing were analyzed. This subset included all subjects with an invasive cancer (n=31) or advanced adenoma (n=403), along with a random subgroup with minor polyps (n=648) and normal findings (n=1423). The analyzed subgroup was similar with respect to age, sex, race/ethnicity, and family history of CRC, as compared to the overall cohort (Table 5). As a group, this cohort included slightly older participants (69.5 yrs), slightly more men (44.5% male), and slightly more nonwhite individuals (13%) than the cohort studied by Ahlquist and colleagues. Two patients (one rectal carcinoid tumor, one cloacogenic tumor) were excluded from analyses and reported results. As compared to the study by Ahlquist and colleagues, the comparative results for Hemoccult II performance are of fair (as opposed to poor) quality. In this study, investigators reported that subjects were given proper dietary and medication instructions, cards were returned for non-rehydrated analysis consistent with manufacturer's instructions, and results for Hemoccult II are given for the same subgroup of persons who received fecal DNA testing.

Of those tested with SDT-1, 8.2 percent were test-positive on the fecal DNA panel and 5.8 percent had a positive Hemoccult II. One-time fecal DNA testing was more sensitive for CRC than Hemoccult II (51.6 percent, [CI: 34.8, 68.0] and 12.9 percent [CI: 5.1, 28.9], respectively). This estimate of sensitivity is much higher than the sensitivity for CRC reported for SDT-1 in the study by Ahlquist and colleagues (Table 6). Sensitivity for advanced adenomas was similarly poor for fecal DNA testing (15.1 percent, [95% CI, 12.0 to 19.0] and for Hemoccult II (10.7 percent, [95% CI, 8.0 to 14.1]). While specificity for CRC or CRC and advanced adenomas did not differ significantly between fecal DNA and Hemoccult II, power to detect a difference was limited since the full sample was not tested (Table 6).

In general, this was a fair-quality study conducted in a large, average-risk screening population. This population was drawn from representing 81 private-practice and university-based settings. Study investigators were blinded, except for the gastroenterologists who had access to FOBT results. This study had several limitations, however, that impact both its internal and external validity (Table 7). These limitations include: poor precision in the estimates of test performance characteristics due to sample size issues, exclusion of 20 percent of the study

population for incomplete testing data (and unknown comparability of patient characteristics for excluded participants), inclusion of a mostly older population (in which three-quarters of the study population was over 65 years of age), inclusion of a mostly White population, number of eligible participants not reported, conduct of the fecal DNA testing centrally at a single lab, and an unusually low estimate for Hemoccult II sensitivity (compared to conventional understanding of Hemoccult II performance). Most importantly, the version of the test evaluated in this study was never commercially available, and the included markers for evaluation are different (no overlap) from the currently available test ColoSure.

The third included diagnostic accuracy study was rated as poor quality and was analysis from a population-based cohort study that examined baseline stool samples for a single mutation of the *KRAS* gene in 441 older adults (aged 50 to 75 years) within a larger cohort study (n=9953) (Table 5).[47] This subgroup represented those who opportunistically received their reference colonoscopy within two years of the DNA testing. The included subgroup was similar to the overall study population, except that more participants in this group reported a first-degree relative with CRC. The fecal test had zero percent sensitivity, testing positive in none of the 31 participants with advanced colorectal neoplasia (seven patients with invasive CRC) (Table 6). The highest rate of mutant *KRAS* was reported in participants with a negative colonoscopy (7.5 percent). Important study limitations include bias in the spectrum of patients self-selecting for colonoscopy, and the lag-time between stool collection and clinical diagnosis that could have affected test performance (Table 7).

Table 5. Patient characteristics for studies of diagnostic accuracy of fecal DNA testing (KQ2)

Author, year	Population	n	Mean age (years)	% male	% non white	SES	Risk factors
Ahlquist, 2008[34]	Enrolled	4482	63.7	47.8	6.4	NR	NR
	Analyzed for SDT-1	2497	60.4	46.0	7.3	NR	NR
	Analyzed for SDT-2	217	66.4	50.2	7.4	NR	NR
Haug, 2007[47]	Included	894	NR	47	NR	NR	% with 1st-degree relative with CRC: 12.0
	Analyzed	441	NR*	NR*	NR*	NR*	NR**
Imperiale, 2004[33]	Included	4404	68.6	44.6	12.7	NR	% with family history of CRC: 14.0
	Analyzed	2507	69.5	44.5	13.0	NR	% with family history of CRC: 13.9

CRC: Colorectal cancer; NR: not reported; SDT-1: sDNA version 1.0; SDT-2: sDNA version 2.0; SES: socioeconomic status

*authors state that patients analyzed did not differ from included patients

**authors state that more patients analyzed reported a 1st degree relative with CRC

Table 6. Diagnostic accuracy of fecal DNA testing in screening populations (KQ2)

Author, year	CRC prevalence	Test	Test positivity	Completion rate		Sensitivity (95% CI)	Specificity (95% CI)
Ahlquist, 2008[34]	0.01% (19/3764)	SDT-1 (prototype sDNA version 1.0)	5.2% (129/2497)	98.2% (3766/3834)	CRC	25% (5-57%)	NR
					Advanced adenomas	19% (5-42%)	NR
					CRC + advanced adenomas	20% (14-26%)	96% (95 to 97%)
		SDT-2 (sDNA version 2.0)	35% (77/217)	98.2% (3766/3834)	CRC	NR	NR
					Advanced adenomas	NR	NR
					CRC + advanced adenomas	40% (32-49%)	NR
Haug, 2007[47]	1.6% (NR)	*KRAS* testing	8% (70/875)	NR	CRC	0% (NR)	NR
					Advanced adenomas	0% (NR)	NR
Imperiale, 2004[33]	0.7% (31/4404)	SDT-1 (prototype sDNA version 1.0)	8.2% (205/2505)	88.3% (4845/5486)	CRC	51.6% (34.8 to 68.0%)	92.4% (NR)
					Advanced adenomas	15.1% (12.0 to 19.0%)	Not calculated
					CRC + advanced adenomas	17.7% (NR)	93.8% (NR)
		Hemoccult 2	5.8% (146/2505)	92.2% (5060/5486)	CRC	12.9% (5.1 to 28.9%)	94.3% (NR)
					Advanced adenomas	10.7% (8.0 to 14.1%)	Not calculated
					CRC + advanced adenomas	10.8% (NR)	95.2% (NR)

CRC: colorectal cancer; NR: not reported; SDT-1: sDNA version 1.0; SDT-2: sDNA version 2.0

Table 7. Limitations and quality concerns for diagnostic accuracy studies of fecal DNA testing (KQ2)

Author, year	Quality rating	Quality concerns	Applicability concerns
Ahlquist, 2008[34]	SDT-1: Fair SDT-2: Poor FOBT: Poor	Small sample size for SDT-2 with limited sampling of controls, authors tried to weight sensitivity for proportion of screen relevant neoplasia in the entire population, but did not presented weighted adjustment for all outcomes Poor precision around outcome measures Subset of patients did not get instructions on dietary restrictions required for FOBT, very low sensitivities reported for FOBT which are not consistent with best known estimates	Mostly White patient population (in comparison to general US population) Neither SDT-1 or SDT-2 were ever available for clinical use and both are very different tests compared to currently available (and soon to be available) testing
Haug, 2007[47]	Poor	Application of reference standard was opportunistic (patient who got colonoscopy were referred for colonoscopy) Average time between index and reference tests not presented, patients had to have colonoscopy within 2 years	Unclear how patient selection was performed, n eligible not reported Higher CRC prevalence in patients analyzed, higher percent of patients with first degree relative with CRC in n analyzed than full study population
Imperiale, 2004[33]	Fair	Analysis focused on subset of patients, only basic demographic data presented detailing differences between full cohort and analyzed subset Poor precision around outcome measures Very low sensitivities reported for FOBT which are not consistent with best known estimates	Exclusion of 20% of enrolled study population due to incomplete testing, characteristics for excluded persons not reported, n eligible not reported Patients received financial compensation Persons 65 years of age and over were disproportionately represented in the study population Test evaluated was never available for clinical use and is a very different test compared to currently available (and soon to be available) testing

CRC: colorectal cancer; FOBT: fecal occult blood test; SDT-1: sDNA version 1.0; SDT-2: sDNA version 2.0

Key Question 6. Harms of fecal DNA testing

We found no studies that specifically evaluated the harms of fecal DNA testing. Hypothesized harms other than harms from diagnostic inaccuracy (false positives and false negatives) include psychological harms (anxiety or worry) around testing. It is unclear if the psychological harms around genetic based testing are qualitatively different or worse than psychological harms of other stool based testing like guaiac based or immunohistochemical fecal occult blood testing.

Based on the included studies, the specificity of SDT-1 and FOBT were not statistically significantly different, although the studies had limited power to detect a difference.[33] Although the specificity of SDT-2 was not reported, SDT-2 had a positivity rate of 16 percent (95% CI, 8 to 24 percent) in persons with normal colonoscopies, and that the positivity rate increase with age.[34,103] This positivity rate is much higher than that reported for FOBT test positivity, but, FOBT test performance data from this study is of poor quality (for the quality reasons discussed above). The downstream effects of false positive results primarily include the harms of unnecessary colonoscopies. Therefore, the harms of fecal DNA testing inaccuracy would be relative to comparative specificity of other stool based testing, but less than colonoscopies itself as a screening option. As stated above, this data has poor applicability given that SDT-1 and SDT-2 are not clinically available and are very different from currently available testing.

Key Question 4. Analytic validity of fecal DNA testing

We found three poor-quality studies that evaluated the analytic validity of currently available fecal DNA assays, specifically a single-marker test for methylated vimentin.[29,31,79] We did not receive any information in the form of the Scientific Information Packet that was requested from Exact Sciences. For analytic validity, we specifically looked for analytic accuracy of the test, repeatability or reproducibility, analytic sensitivity or lower limit of detection of the test, or analytic specificity (Table 8).

Table 8: Definitions for analytic validity[104]

Accuracy	Ability of assay to measure what it purports to measure determined independently by a reference method
Repeatability or precision	Replication of results when the assay is performed multiple times on a single specimen
Reproducibility	Replication of results when assay is performed on different specimens, or on different days, or by different operators
Analytic sensitivity or lower limit of detection	Ability of assay to detect all true positive specimens, for quantitative tests this is the defined as the smallest quantity of a substance that can be reliably detected or quantified
Analytic specificity	Ability present in the sample of assay to measure the target substance when potentially interfering or cross-reacting substances are present in the sample

In summary, these three studies show that technological advances in analytic factors, i.e., test methods and performance of procedures, can improve the analytic sensitivity of assays to detect methylated vimentin in stool samples (Table 9). None of the studies evaluated the repeatability, reproducibility, or analytic specificity of testing. These three studies were generally of poor quality, and it is unclear if the exact technological advances evaluated in these studies are applicable to the currently available test for methylated vimentin (ColoSure).

Two studies evaluated technological advances aimed at improving the analytic sensitivity of testing. The most recent study by Li and colleagues was aimed at testing methyl-BEAMing to methylated vimentin in plasma and stool from colon cancer patients.[31] Methyl-BEAMing (Beads, Emulsion, Amplification, and Magnetics) is a method for performing methylation specific PCR in compartments created by the emulsion that contain individual strands of DNA to allow digital enumeration of the PCR products. This technique's accuracy was compared with next generation sequencing (sequencing by synthesis) in stool samples from patients with CRC (n=5) and the analytic sensitivity was compared to methylation specific PCR without methyl-BEAMing. The study found that enumeration of methylation by either next generation sequencing or methyl-BEAMing produced essentially the same result in both samples with low and high fractions of methylated vimentin (Table 9). Another experiment within this study showed that methyl-BEAMing enhanced overall technical sensitivity for detecting methylated vimentin DNA by at least 62-fold in artificial samples created by mixing DNA from peripheral blood lymphocytes (unmethylated) with DNA from CRC cell lines (methylated). The overall quality of both experiments was poor given the small sample sizes and incomplete reporting of results. Accuracy was only assessed in five samples, and only reported for four of the five samples. It is unclear if the experiment for the analytic sensitivity was replicated. The applicability of this experiment is also poor given that the accuracy study was conducted in plasma samples, rather than stool samples, and methyl-BEAMing does not appear to be used in the assay evaluated by Ahlquist and colleagues (included in Key Question 2), or in the currently available methylated vimentin test.

The second study by Zou and colleagues was aimed at testing a method known as methyl-binding domain (MBD) enrichment to see if it could increase the analytic sensitivity for detecting tumor-specific methylated markers in patient stools.[79] Two sets of experiments showed that the assay with MBD enrichment had a lower limit of detection of methylated vimentin in normal stool aliquots with added DNA from CRC cell lines, and in stool samples from patients (n=8) with known CRC with tissue positive for methylated vimentin (Table 9). The lower limit of detection of methylated vimentin with MBD enrichment was 10ng from the normal stool with added DNA from cell lines, and 4ng from stool samples from patients with CRC. This study, however, was rated as poor quality because it had very small sample sizes. We cannot assess the applicability of this study because it is unclear if MBD enrichment was used in the assay evaluated by Ahlquist and colleagues (included in Key Question 2), or is used in the currently available methylated vimentin test.

The earliest study by Chen and colleagues is essentially a proof-of-concept study aimed at testing the technical limits to the sensitivity of detecting DNA methylation.[29] It showed that methylation specific PCR could detect as little as 25-50 pg of input methylated DNA, which corresponds to a detection limit for the assay of approximately 15 methylated cells (Table 9). This study, however, was rated as poor quality mainly because the experimental results were only reported for one sample. More importantly, this study has poor applicability to current tests as it was conducted in tumor tissue and not conducted in stool samples. This lower limit of detection is an order of magnitude lower than the Zou study conducted in stool samples.

Table 9. Analytic validity of fecal DNA testing (KQ4)

Author, year	Experiment aim	Outcomes	Quality concerns	Applicability concerns
Li, 2009[31]	To test methyl-BEAMing in the detection of methylated vimentin DNA in plasma and stool from CRC patients	Lower limit of detection: 0.1% (1/1000 copies) methylated DNA detected using methyl-BEAMing versus no detection <6.2% without methyl-BEAMing	Poor: Small sample size (n=1 series of dilution) and poor reporting, unclear if experiments were repeated and results replicated	Mostly performed in plasma samples not stool samples Methyl-BEAMing method does not appear to be used in assay studied (KQ2) or currently available testing
		Accuracy (compared to next-generation sequencing): enumeration of methylation by methyl-BEAMing (0.018%) and reference standard (0.015%) in cancer cell lines; enumeration of methylation by methyl-BEAMing (10.8%) and reference standard (11.35%) in stool sample ("substantiated in 3 other samples")	Poor: Small sample sizes, unclear if experiment in cancer cell lines repeated and results replicated; experiment in stool samples (n=5), results only appear to be reported for 4 of 5 samples	
Zou, 2007[79]	To test whether method using methyl-binding domain (MBD) could increase assay sensitivity for detecting methylated markers in stool	Lower limit of detection (in stool with cell line DNA added): methylated vimentin was detectable in stool aliquots to which 10 and 50 ng cancer cell line DNA, but not those with 0 and 2 ng using MBD enrichment; versus not detectable in any stool aliquot without MBD enrichment	Poor: Small sample size (n=1 series of dilution), unclear if experiments were repeated and results replicated	Unknown if MBD column is used in assay studied (KQ2) or currently available testing
		Lower limit of detection (in stool from CRC patients): methylated vimentin was detected in 4 CRC stool samples (4-832 ng human DNA), but not detected in the other 4 samples (0.5-10 ng human DNA) using MBD enrichment; versus only 1 CRC stool sample (832 ng human DNA) without MBD enrichment	Poor: Small sample size (n=8)	
Chen, 2005[29]	To test the technical limits to the sensitivity of assay of methylated vimentin	Lower limit of detection (in normal mucosa with cell line DNA added): PCR could detect as little as 25-50 pg of methylated DNA in the presence of a 500- to 1000- fold excess of normal mucosal DNA	Poor: Small sample size (n=1 series of dilution), unclear if experiments were repeated and results replicated	Not conducted in stool samples

Key Question 5. Acceptability and adherence of testing

We found five fair- to poor-quality studies that evaluated the acceptability,[105-109] and 2 diagnostic accuracy studies (from Key Question 2) that reported the adherence to fecal DNA testing.[33,34] From very limited evidence, it appears that fecal DNA testing, in the form of a single whole stool sample, is generally acceptable, although an important test attribute for acceptability appears to be the test's accuracy. In one fair-quality diagnostic accuracy study fecal DNA adherence was lower than adherence to Hemoccult II. No studies have evaluated the relative acceptability or adherence of fecal DNA tests to FIT tests. This is an unfortunate omission, as FIT is the most similar to fecal DNA testing in that it is a non-invasive stool based test that does not require any dietary or medication restrictions. Unlike other stool-based testing, however, fecal DNA testing is currently a single whole-stool sample which theoretically may be preferable to serial card based testing.

It is likely that future fecal DNA testing will be sufficiently different both in the format/collection (no longer a single whole stool sample) and in test accuracy, such that this currently available evidence on acceptability and adherence to fecal DNA testing will no longer be relevant.

Acceptability of testing. We found five fair-to poor-quality studies that evaluated the acceptability of fecal DNA testing (Table 10). Two fair- to poor-quality studies were conducted by Marshall and colleagues.[108,109] In these two studies, authors used a cross-sectional survey and modeling to measure Canadian preferences for CRC screening tests[108] or to measure patient and physician preferences for CRC screening tests in both Canada and the US[109]. These two studies were rated as fair quality in assessing patient preferences on attributes of testing, but poor quality in assessing patient or physician preference (or willingness to pay) for type of testing. In both studies, adults without a history of CRC (n=2135) were surveyed to elicit preferences on key attributes of available screening tests (e.g., process, preparation, pain, sensitivity, specificity, frequency, follow-up, complication risk and cost). The studies found that patient's preferred tests that were non-invasive, required no pain or preparation, were highly accurate, did not require repeated measurements over time, and caused no complications. One study used modeling to rank the importance of attributes and found that the relative importance was (in order of most to least importance): sensitivity, specificity, preparation, process, pain.[108] The second study also surveyed 100 US and 100 Canadian practicing primary care physicians.[109] The most preferred attribute for primary care physicians was high sensitivity, other important attributes included pain, specificity, complication risk, preparation, and testing frequency. The major limitation of survey portion of the study include was a 52 percent response rate in one study [108] and no reported response rate in the second study[109]. Both studies used modeling to rank the types of tests (in order of most preferred to least preferred), however, the results from these models are not reliable due to substantial modeling limitations (Table 10).

One fair-quality test manufacturer-funded study by Schroy and colleagues was designed to compare the perceptions of fecal DNA, Hemoccult II and colonoscopy in a screening population (Table 10).[105] In this study, participants (n=4840) in the diagnostic accuracy study by Imperiale and colleagues received a 25-item questionnaire on the three different screening tests that they completed as part of the study. Eighty-four percent (4042/4840) of all participants who completed all three screening tests returned the mailed questionnaire. This study evaluated the prototype to PreGen Plus a multi-marker panel requiring one single whole stool sample (mailed

into laboratory by patient). Overall, 45 percent of respondents preferred fecal DNA testing, 32 percent preferred Hemoccult II, 15 percent preferred colonoscopy, and eight percent had no preference ($p<0.001$). However, on the individual measures (ease of instruction, simplicity of collection, comfort, invasiveness, embarrassment, anxiety of prep, anxiety of test, accuracy, and likeliness to repeat test) there was no meaningful difference between fecal DNA testing and Hemoccult II. Authors conclude that fecal DNA testing was rated more favorably (for simplicity of collection, comfort, anxiety of prep, accuracy, and likeliness to repeat) based on statistical significance alone, however, the difference was a fraction of a point on a five-point scale. Although colonoscopy was perceived to be more accurate than fecal DNA testing, respondents rated colonoscopy as less favorable in terms of invasiveness, anxiety (around prep and test), and less likely to repeat the test. Although this study was rated as fair quality, a few limitations of this study make it difficult to generalize study findings—no mention of missing data, participants received financial compensation for the study, and participants had to adequately complete all three screening tests to be included in the study.

The other two poor-quality, manufacturer-funded studies provide little additional information given their methodological weaknesses (Table 10). Another study by Schroy and colleagues was a much smaller (n=263) cross-sectional survey in participants at average-risk for CRC designed to assess patient preferences for CRC screening methods.[107] The survey was conducted as a structured interview after receiving patient education about the different screening modalities, including fecal DNA testing, FOBT, colonoscopy, flexible sigmoidoscopy with or without FOBT, and double contrast barium enema (DCBE). Unfortunately, as stated by the authors, during the education component the accuracy of fecal DNA testing was incorrect (it stated that the ability to predict precancerous polyps was medium to high). While the study also reported on participants' willingness to pay out of pocket for testing, these patients were not presented with the costs of each test to inform their decision. The last study was a convenience sampling survey designed to examine patients' screening experiences with fecal DNA testing. Berger and colleagues analyzed returned questionnaires that were included with the PreGen Plus collection kit for the first 2 years it was commercially available. However, only 18 percent of persons who received the PreGen Plus test kit returned the survey.

Table 10. Patient preferences and acceptability of fecal DNA testing (KQ5)

Author, year	Study aim	Study design N participants	Outcomes	Quality concerns	Applicability concerns
Marshall, 2009[109]	To compare patient and physician preferences about CRC screening tests	Cross-sectional survey N=1588 patients N=200 physicians	Patients' test preferences: non-invasive, do not require repeated measurements over time, no pain, no preparation, no complications, and high accuracy Physicians' test preferences: change in sensitivity from 40 to 90%, pain, process, specificity, complication risk, preparation, and testing frequency	Fair: response rate not reported	Financial compensation given for survey; FITs were not included as a screening option
		Model	Patients' preferred tests: fecal DNA, colonoscopy and CT colonography Physicians' prediction of patient's preferred tests: colonoscopy, CT colonography, and fecal DNA	Poor: lack of reporting about model inputs, lack of inclusion of all relevant testing (i.e., FIT), no sensitivity analyses around important model inputs	
Marshall, 2007[108]	To assess patient preferences about CRC screening tests	Cross-sectional survey N=547	Patients' test preferences: non-invasive, no preparation, no pain, and high accuracy	Fair: 52% response rate	Canadian participants age 40-60 years old; CT colonography option is without bowel preparation (bowel prep is part of protocol in US based practice); FITs were not included as a screening option
		Model	Relative importance of test preferences (most to least important): sensitivity, specificity, preparation, process, pain Preferred tests (most to least preferred): CT colonography, colonoscopy, double contrast barium enema, flexible sigmoidoscopy, fecal DNA, FOBT	Poor: lack of reporting about model inputs, incorrect model inputs (CT colonography without bowel preparation), lack of inclusion of all relevant testing (i.e., FIT), no sensitivity analyses around important model inputs	
Schroy, 2007[107]	To assess patient preferences about CRC screening tests	Cross-sectional survey N= 263	Test preferences (most to least important): accuracy, frequency, discomfort, time, complications, preparation, need for follow-up testing Preferred tests (most to least preferred): colonoscopy, fecal DNA, FOBT, FOBT plus flexible sigmoidoscopy, flexible sigmoidoscopy, double contrast barium enema	Poor: response rate not reported; participants provided with incorrect (overestimated) information on fecal DNA test accuracy during educational counseling; willingness to pay outcome assessed, but cost of tests were not provided to participants during educational counseling	Participants were given financial compensation, FIT (and CT colonography) were not included as screening options

Table 10. Patient preferences and acceptability of fecal DNA testing (KQ5) (cont.)

Author, year	Study aim	Study design N participants	Outcomes	Quality concerns	Applicability concerns
Berger, 2006[106]	To assess patients' screening experience with fecal DNA testing	Convenience survey N= 1211	Most of the survey respondents found fecal DNA testing easy to perform sample collection, obtain collection materials, and return specimen	Poor: 18% response rate, no relative outcomes in comparison to other screening tests	Participants all ordered fecal DNA testing kit (within first 2 years it was commercially available), 73% of respondents were less than 65 years
Schroy, 2005[105]	To compare patients' perceptions of fecal DNA, FOBT, colonoscopy	Cross-sectional survey of participants in diagnostic accuracy study N= 4042	Test preferences: colonoscopy was perceived more accurate than stool based tests but less favorable in terms of invasiveness, anxiety (around preparation and test), likeliness to repeat test; very small but statistically significant differences between fecal DNA and FOBT Preferred tests (most to least preferred): fecal DNA (45%), FOBT (32%), colonoscopy (15%), no preference (8%), $p<0.001$	Fair: 84% response rate, conclusions drawn on statistical significance (unclear clinical significance)	Participants in diagnostic accuracy study had to be adherent to testing and were given financial compensation; only FOBT and colonoscopy were evaluated as screening options

Adherence to testing. Two studies included from Key Question 2 examining the diagnostic accuracy of fecal DNA testing reported completion of fecal DNA testing in comparison to FOBT and colonoscopy.[33,34] We found no additional studies that specifically examined adherence to fecal DNA testing. Both of the studies addressing adherence evaluated fecal DNA testing requiring a single whole stool sample mailed to the laboratory. In the fair quality study by Imperiale and colleagues (see Key Question 2 results), 11.7 percent (641/5486) did not complete the fecal DNA test versus 7.8 percent (426/5486) did not complete Hemoccult II, and 14 percent (770/5486) did not complete colonoscopy.[33] In the other fair-to poor-quality study by Ahlquist and colleagues (see Key Question 2 results), the adherence to testing was much higher, only 1.8 percent (68/3834) did not complete the stool testing (assumed both fecal DNA and FOBT) within the allotted time (120 days).[34] Authors report that 4.3 percent (171/4005) did not have an adequate colonoscopy (did not reach cecum or view over 90 percent of the colorectum). It is unlikely that these completion rates can be generalized to practice given that participants were given financial compensation for participation in both studies. Additionally, completion of the fecal DNA and FOBT testing were done simultaneously in one study (patients collected 3 whole stool specimens in a plastic bucket and promptly smeared stool onto both window of the Hemoccult II and Hemoccult Sensa cards and mailed all specimens into the lab).[34]

Summary and Discussion

Strength and applicability of evidence

Despite considerable media attention and expert-based clinical recommendations that include fecal DNA testing as an option for CRC screening, there is currently insufficient evidence regarding the clinical accuracy (or clinical validity) for fecal DNA tests in patients at average risk for CRC (Table 11). Few studies use appropriate study designs to determine screening test accuracy in asymptomatic populations, and these studies do not evaluate clinically available fecal DNA tests.

We found only three studies that evaluated the performance of fecal DNA tests in asymptomatic persons. The best evidence is from two studies (n analyzed=5004) that evaluated a multi-marker fecal DNA test that was a prototype to a later version that was clinically available as PreGen Plus.[33,34] The sensitivity to detect CRC for this prototype was discordant between two studies (25 percent [95% CI, 5, to 57 percent] versus 51.6 percent, [95% CI, 34.8 to 68.0 percent]), although the confidence intervals overlapped. Sensitivity for advanced adenomas was similarly poor in both studies (19 percent [95% CI, 5 to 42 percent] and 15.1 percent, [95% CI, 12.0 to 19.0 percent]). Between-study differences, such as differences in study populations, do not clearly account for differences in test sensitivities. Specificity for any screen-relevant neoplasm (CRC and advanced adenoma) ranged from 93.8 percent (95% CI, could not calculate) to 96 percent (95% CI, 95 to 97 percent). Hemoccult II performed unusually poorly in both of these studies, with sensitivity for CRC of 12.9 percent (95% CI, 5.1 to 28.9 percent), and 11 percent (95% CI, 6 to 16 percent). Best, and generally accepted, estimates for sensitivity of Hemoccult II for CRC ranges from 25 to 38 percent, with 98 to 99 percent specificity for CRC.[102] Other available stool-based testing have been shown to have much higher sensitivities (but with lower specificity) for CRC. Best estimates for Hemoccult Sensa for CRC are approximately 64 to 80 percent sensitivity and 87 to 90 percent specificity.[5] Although FITs represent a heterogeneous group of tests, sensitivity for CRC appears to range from about 61 to 91 percent, and specificity ranges from 91 to 98 percent.[5]

Due to the differences in tests evaluated and differences in sensitivity between the two studies that evaluated the same test, the evidence for the test accuracy for fecal DNA testing is both inconsistent and imprecise. Fecal DNA test development has evolved significantly over the past decade (and continues to develop), reflecting advances in the understanding of molecular markers that reflect neoplastic change and ongoing advances in technologies to stabilize, extract, and amplify/detect low levels of human target DNA in stool samples. Therefore the only 3 studies on test performance of fecal DNA tests in screening populations do not reflect the current commercially available fecal DNA test (or soon to be available fecal DNA testing). Likewise, harms and acceptability of and adherence to fecal DNA testing also have insufficient evidence (Table 11) and are largely not applicable to currently available fecal DNA tests. Because test preference is influenced by test performance, acceptability and adherence to testing will need to be reexamined once test performance is known. In addition, acceptability and adherence should be examined in comparison to other stool-based screening methods, specifically FITs, which do not require any dietary or medication restrictions. Subtleties in stool collection (e.g., number of samples; cards versus vials versus whole stool) may also affect acceptability and adherence, and therefore may change if future fecal DNA testing no longer requires a single whole stool specimen. Currently, there is no evidence that directly addresses

health benefit (or clinical utility) or intervals of screening for fecal DNA testing. Experts suggest that new diagnostic tests may be substituted for an established test based on diagnostic accuracy studies alone if the new test is clinically superior to existing tests (e.g., safer or more specific than, but of similar sensitivity to, the established test).[110] After test performance in screening populations is established, and if the test is not obviously clinically superior to existing tests, modeling using robust CRC screening models (MISCAN, SimCRC) could inform net health benefit (e.g., tradeoffs from improved sensitivity and reduced specificity) and optimal intervals of screening using fecal DNA testing.

Table 11. Strength of evidence for fecal DNA testing

Outcome (key question)	# studies (n pts)	Study design	Risk of bias	Consistency	Directness	Precision	Strength of evidence
Morbidity or mortality (KQ1)	None						Not applicable
Test performance (KQ2)	3 (n=5662)	Diagnostic accuracy studies	Serious	Inconsistent (2 studies)	Indirect	Imprecise	Insufficient
Test performance, interval (KQ3)	None						Not applicable
Analytic validity (KQ4)	3 (not applicable)	In vitro laboratory studies	Very serious	Not applicable (no replication)	Indirect	Imprecise	Insufficient
Acceptability Adherence (KQ5)	5 (n=7851) 2 (n=9968)	Cohort, cross-sectional	Very serious	Consistent	Indirect	Imprecise	Insufficient
Harms-diagnostic inaccuracy (KQ6)	3 (n=5662)	Diagnostic accuracy studies	Serious	Consistent	Indirect	Imprecise	Insufficient

Evidence gaps

In order to understand the clinical utility of fecal DNA testing, clinicians and decision-makers need evidence to inform the net benefit and comparative effectiveness of fecal DNA testing in screening asymptomatic persons for CRC. Table 12 outlines the development of research for fecal DNA screening tests. While different decision-makers may have different thresholds for the types of evidence required to consider a test for clinical use (e.g., may not require evidence of clinical utility), most would agree that robust evidence on the clinical test validation in the intended population would be the minimum evidence required for clinical decision making. Presently, there is no such evidence on test performance (diagnostic accuracy and inaccuracy) in a screening population for either currently available testing or soon to be available testing. Evidence about optimal screening intervals, analytic validity, and acceptability of adherence (helpful in understanding the implementation of screening and the real world effectiveness of screening) are also generally lacking. Evidence thus far has primarily focused on initial test validation of an evolving series of tests (Table 12). However, clinical decision making cannot rely on initial test validation results alone, especially when viable alternative tests exist (other CRC screening tests including stool based testing).[110] Empiric evidence shows that distorted selection of participants (including non-representative patients) and use of case-control study designs overestimate overall test accuracy due to both variation and spectrum bias.[39,40]

Our review is consistent with these findings. When we compare the results from the three included studies with the initial validation studies identified but excluded from this review, we found exaggerated sensitivities in these studies excluded for their high potential bias. For example, initial validation studies for the prototype of PreGen Plus had sensitivity for CRC estimates around 90 percent, and subsequent test validation studies in screening populations showed much lower sensitivities (about 25 to 50 percent).[15] In addition, independent validation of tests in a larger and (more) representative cohort can reveal “implementation” issues that can also affect test performance in a clinical setting. For example, authors suggest that the diagnostic accuracy study by Imperiale and colleagues had a much lower sensitivity than anticipated because of DNA degradation during the transport and storage of the stool sample, which led to the subsequent development and addition of a buffer to stabilize the target DNA in stool samples.[17]

Table 12. Evidence landscape for fecal DNA testing

Phases of test development	Description	Available evidence
Marker identification and assay development	To identify molecular alterations associated with colorectal cancer To develop assays that can detect these alterations in tumors and in stool samples	Likely numerous studies, often unpublished, our review only included studies on analytic validity of currently available testing (n=1) and not other aspects of assay development
Initial test validation and assay refinement	To determine ability and accuracy of test in persons with CRC or advanced adenomas To develop technological improvements to assays	Numerous studies (N>60) on different assays/markers Limited evidence for analytic validity of currently available testing (n=2), often unpublished
Test validation in intended population and generalizability	To determine diagnostic accuracy for detection of CRC or advanced adenomas of test in screening population To determine factors affecting application and test performance in real-world setting (including test feasibility and acceptability)	Limited studies (n=3) evaluating test performance of different tests, none of which are applicable to currently available testing Limited studies (n=5) evaluating acceptability of fecal DNA tests (no studies compared fecal DNA to FIT acceptability)
Clinical test performance and health impact	To compare the effectiveness and harms of fecal DNA testing versus established screening alternatives on health outcomes	No direct evidence (modeling exercises can be valuable, if good estimates of diagnostic accuracy are available)
Net benefit of testing, cost-effectiveness	To determine population net benefit or cost-effectiveness of fecal DNA screening in a program of repeated screening (compared to relevant screening options)	No direct evidence, cost-effectiveness not addressed in this review (modeling exercises can be valuable, if good estimates of diagnostic accuracy are available)

Therefore, the most critical evidence gap for fecal DNA testing to screen for CRC the lack of appropriately designed diagnostic accuracy studies applicable to currently available fecal DNA testing. While we found no evidence to specifically address harms of testing, we do not expect any clinically significant harms other than the (unnecessary) downstream effects of testing and complications from testing resulting from false positives, or clinically significant sequelae from missed diagnosis resulting from false negatives. While some degree of worry could be engendered by being offered fecal DNA testing, evidence to support clinically meaningful negative psychological impacts from stool based screening or the negative impacts of fecal DNA testing compared to other stool based tests does not exist.[111] Ultimately, the issue of considering the net benefit of fecal DNA testing compared to the best CRC screening alternative(s) may require some degree of modeling, especially without clearly superior new testing[110] or applicable comparative effectiveness trials reporting health outcomes (which may never happen given the rapid evolution of fecal DNA testing).

When better quality, more applicable diagnostic accuracy studies in screening populations become available, clinicians and decision makers can use robust models that have been developed by the National Cancer Institute (NCI) Cancer Intervention and Surveillance Modeling Network (CISNET) for evaluating CRC screening to estimate net benefit of testing and optimal intervals of testing, compared to other currently used or promising screening modalities. In 2007, the Centers for Medicare and Medicaid Services (CMS) commissioned to

CISNET to do a cost-effectiveness analysis of screening with fecal DNA testing in support of a National Coverage Determination process to determine whether PreGen Plus, version 1.1 should be covered for Medicare enrollees.[112] Based on two independently conducted microsimulation models (MISCAN and SimCRC), the cost-effectiveness of fecal DNA testing was modeled for fecal DNA test every 3 or 5 years to screen for a cohort of patients at average risk for CRC aged 65 years compared to other screening modalities (Hemoccult II, Hemoccult Sensa, FIT, flexible sigmoidoscopy, and colonoscopy) enrollees.[112] Based on these modeling exercises, the investigators found that at $350 per test, fecal DNA testing would not be cost-effective regardless of sensitivity and specificity at any level of test accuracy. They found that that fecal DNA testing would be cost-effective at a per-test cost of $40 to $60 (depending on the model used), if used every 3 years. Fecal DNA testing, however, could be effective at current cost if the relative adherence to fecal DNA testing was at least 50 percent better than that with other screening tests.

Although modeling exercises can use sensitivity analyses around test adherence to see if the comparative effectiveness between different screening tests is robust to variation and differential test adherence, understanding issues around patient acceptability and actual adherence to fecal DNA testing is still quite important. The most important driver of poor early detection of CRC is not the less-than-perfect sensitivities of different screening tests, but the suboptimal uptake of screening tests. Advocates in the field have stated that the best screening test is the test that is completed. Therefore, if fecal DNA testing can improve uptake of CRC screening because it appeals to persons who are unscreened or under screened, it could have a significant clinical and public health benefit. Existing studies, albeit limited, seem to consistently identify factors that influence patient preferences around testing. Patients prefer tests that are non-invasive, require no pain or preparation, are highly accurate, do not require (frequently) repeated testing, and cause no complications. Stool-based tests that require little to no preparation, like fecal DNA testing or FITs, may be preferable to patients, although both would require repeated testing. Currently there is no evidence about the relative preference and adherence between fecal DNA testing and FITs. In addition to understanding the comparative test performance between these two types of testing, any differences in preference and adherence between these tests will also be important. Subtleties in stool collection may also affect acceptability and adherence, and therefore preference and adherence studies must be specific to particular tests because the test accuracy and method/details of stool collection may even vary between different fecal DNA and FIT tests.

Finally, issues around the fecal DNA test's analytic validity are important to address since these issues/factors can help inform understanding of clinical validity of a test as well as inform what may be needed for post implementation monitoring and quality control. Analytic validity is the assay's ability to accurately and reliably measure the genotype.[104] Diagnostic tests subject to FDA approval must provide evidence on the accuracy in, and reliability of, measuring the analyte (or genotype) of interest.[113] Our review of analytic validity focused on the accuracy, lower limit of detection, analytic specificity, repeatability and reproducibility of fecal DNA assays for methylated vimentin (the basis of ColoSure). We located only three relevant studies despite searching non-published and grey literature and requesting additional information from Exact Sciences. We found no evidence on the overall analytic validity of methylated vimentin fecal DNA testing. We found one early proof-of-concept paper focusing on experiments showing that testing for methylated vimentin as a marker for CRC was possible (in tumor tissue), and two studies with experiments evaluating specific technologies (methyl-BEAMing, and methyl-

binding domain enrichment) and their ability to improve the lower limit of detection for target DNA in stool. We found no evidence on the repeatability or reproducibility of the currently available fecal DNA test on methylated vimentin. These two dimensions of analytic validity are clinically relevant to larger-scale implementation of testing and quality assurance of testing once implemented, especially as fecal DNA testing becomes more complicated. This may result from including multiple molecular markers and more advanced or combinations of technologic components because there may be more opportunities for variations in important pre-analytic and analytic factors. Reporting of potentially important details that may affect analytic validity of assays should be routinely reported in clinical evaluation studies, so it is transparent from the studies differences in the conduct of the test between studies and between research and clinical practice (implementation). Especially given the constant changes in test development, test developers and researchers need to be transparent and explicit about differences in the assays evaluated in studies and the actual assays that are clinically available.

Limitations

Based on this systematic review, we know that fecal DNA test research and development is a continuously evolving field. The limitations in this review primarily stem from the limitations in the primary research and the moving target nature of fecal DNA testing (resulting in a mismatch between primary research and available testing). However, there are few important limitations in scope and timing of this review. Our review focused on fecal DNA testing to screen for CRC, and therefore did not address other potential roles of fecal DNA testing (i.e., in a diagnostic algorithm for individuals at high risk for developing CRC, monitoring or surveillance of individuals with previously abnormal screening results, or as a prognostic test or test for treatment prediction once cancer is diagnosed). Also, our review did not include stool-based RNA testing or other genetic/genomic based testing in plasma. However, these newer types of genetic/genomic testing to screen for CRC are more developmental than fecal DNA testing. Finally, given the rapidly evolving nature of fecal DNA testing, this review will likely be out of date in the near future (although the framing of issues will not), as new tests and evidence supporting them become available in the next 1 to 2 years.

Future Research

Future research for fecal DNA testing to screen for CRC should focus on identified evidence gaps. Research to facilitate clinical adoption of fecal DNA testing should focus on the diagnostic accuracy of testing of those tests that are widely available at present or in the near future, as well as the comparative effectiveness of fecal DNA testing versus other best alternative stool based screening tests (e.g., FIT). Future research to inform the net clinical benefit and optimal intervals for repeated screening will likely be from CISNET's microsimulation models. Analytic validity studies, especially on accuracy and repeatability/reproducibility, should be published or made publically available. More upstream test development should focus on defining the optimum combination of markers and simplifying and automating test procedure without loss of analytic validity to improve throughput and reduce cost.

Upcoming studies

Through conversations with our TEP, conference presentations, and information from investment conference telephone calls, we understand that Exact Science is currently developing a new assay, a multi-marker fecal DNA test plus FIT, Cologuard. This test is expected to be available within the next couple of years. To our knowledge it includes a combination of different markers (methylation markers, mutations in *KRAS* exon 2) and a FIT, and uses new proprietary technology (Table 1). However, the details of the assay are still unknown. Initial validation results which have been presented suggest improved sensitivity for both CRC and large adenomas (85 percent and 64 percent, respectively).[114] Initial validation studies are expected to be published in later 2011 and 2012. A large prospective study to evaluate Cologuard test performance in average risk patients for CRC cancer has started to enroll patients as of June 30, 2011. Results from this prospective study are expected in 2013 to coincide with an application for FDA approval and review for CMS National Coverage Decision of Cologuard to screen for CRC. Other than Cologuard, we did not identify any other forthcoming (widely or commercially available) fecal DNA testing in North America.

Although fecal DNA test development and validation continues to be an active area of research, we found only two upcoming studies, in addition to the Cologuard study, that appear to evaluate tests in clinically relevant populations (asymptomatic screening populations). From our review of relevant conferences, we found numerous abstracts (without full publication of results) on the initial validation of different tests (and different combinations of markers) (Table 4). However, we identified one potential study in abstract form that evaluated fecal DNA testing in an asymptomatic screening population.[115] In addition to conference abstracts, we searched for upcoming studies in study registries and found an additional study (currently in progress) evaluating the test performance of a fecal DNA test for methylated DNA, Colohybritest.[116] This test evaluation, however, is being conducted in asymptomatic persons with a positive FOBT.[116]

Other emerging genomic tests

Genetic or genomic tests other than fecal DNA testing were not included in this review. The use of RNA markers in stool has not been as extensively studied as DNA markers, but is a new area of active research. Multiple forms of RNA have been studies as potential cancer biomarkers in fecal samples. These include both messenger RNA (mRNA), which is protein coding, as well as microRNA which are noncoding sequences that affect gene expression. Recent preliminary

research presented as meeting abstracts indicates that the most promising mRNA markers may be COX2, MMP7, B2M, CKB, and Snail mRNAs.[117-119] Candidate markers for microRNA (miRNA) that been identified in preliminary exploratory research include miR-17-92, miR-18a, miR-20a, miR-21, miR-92, miR-106a, miR-135, and miR-221.[120-123]

In addition to genetic testing in stool samples, the use of DNA or RNA in plasma and serum has also been examined using PCR-based assays that can detect small amount of genetic and epigenetic alterations in circulating tumor DNA.[124] The most recent efforts have focused on the detection of methylated DNA , the most widely studied marker is currently *SEPT9*, this marker is one of the few that has had multiple initial test validation studies.[125] Test accuracy based on initial validation studies have varied across independent case-control studies. Preliminary results from a large prospective study (n=7,914) in asymptomatic patients focused on *SEPT9* plasma screening are expected to be published in the Summer of 2011.[126] Research is ongoing to identify additional markers that may add to the sensitivity of detection in plasma and serum samples.[124]

Finally, the detection of nucleic acid biomarkers of CRC in urine is a new approach with very limited data at this time. For markers to be present in urine some degree of metabolism would be required to clear glomerular filtration and be excreted. Levels of nucleosides (small-fragment metabolic products of DNA) characteristic of CRC and adenomas have been found in urine and have been proposed as a mechanism to discriminate patients with CRC from controls.[17,127]

References

1. American Cancer Society. Colorectal Cancer Facts & Figures 2011-2013. Atlanta: American Cancer Society; 2011. PMID: None.

2. SEER Cancer Statistics Review, 1975-2008. National Cancer Institute; 2011. PMID None.

3. Richardson LC, Tai E, Rim SH, et al. Vital signs: colorectal cancer screening, incidence, and mortality --- United States, 2002--2010. Morbidity and Mortality Weekly Report 2011 Jul 8;60(26):884-89. PMID: 21734636.

4. American Cancer Society. Cancer Facts & Figures 2010. No. 500810. Atlanta: 2010. PMID: None.

5. Whitlock, EP, Lin, J, Liles, E, et al. Screening for colorectal cancer: an updated systematic review. Report No.: 08-05-05124-EF-1. Rockville, MD: Agency for Healthcare Research & Quality; 2008. PMID: 20722162.

6. Soetikno RM, Kaltenbach T, Rouse RV, et al. Prevalence of nonpolypoid (flat and depressed) colorectal neoplasms in asymptomatic and symptomatic adults. JAMA 2008 Mar 5;299(9):1027-35. PMID: 18319413.

7. Young GP, Bosch LJ. Fecal tests: from blood to molecular markers. Curr Colorectal Cancer Rep 2011 Mar;7(1):62-70. PMID: 21423316.

8. Markowitz SD, Bertagnolli MM. Molecular basis of colorectal cancer. New England Journal of Medicine 2009 Dec 17;361(25):2449-60. PMID: 20018966.

9. Holden DJ, Jonas DE, Porterfield DS, et al. Systematic review: Enhancing the use and quality of colorectal cancer screening. Ann Intern Med 2010;2010(10):668-76. PMID: 20388703.

10. Levin B, Lieberman DA, McFarland B, et al. Screening and surveillance for the early detection of colorectal cancer and adenomatous polyps, 2008: a joint guideline from the American Cancer Society, the US Multi-Society Task Force on Colorectal Cancer, and the American College of Radiology. Gastroenterology 2008 Mar 5;58(5):130-60. PMID 18322143

11. Agency for Healthcare Research and Quality. Screening for colorectal cancer: U.S. Preventive Services Task Force recommendation statement. Ann Intern Med 2008;149(9):627-37. PMID: 18838716.

12. Burt RW. Colorectal cancer screening. Current Opinion in Gastroenterology 2010 Sep;26(5):466-70. PMID: 20664346.

13. Rex DK, Johnson DA, Anderson JC, et al. American College of Gastroenterology guidelines for colorectal cancer screening 2009. Am J Gastroenterol 2009;2009(3):739-50. PMID: 19240699.

14. Anderson WF, Guyton KZ, Hiatt RA, et al. Colorectal cancer screening for persons at average risk. Journal of the National Cancer Institute 2002 Aug 7;94(15):1126-33. PMID: 12165637.

15. Bosch LJ, Carvalho B, Fijneman RJ, et al. Molecular tests for colorectal cancer screening. Clin Colorectal Cancer 2011 Mar 1;10(1):8-23. PMID: 21609931.

16. Potack J, Itzkowitz SH. Practical advances in stool screening for colorectal cancer. Journal of the National Comprehensive Cancer Network 2010 Jan;8(1):81-92. PMID: 20064291.

17. Ahlquist DA. Molecular detection of colorectal neoplasia. Gastroenterology 2010 Jun;138(6):2127-39. PMID: 20420950.

18. Kisiel JB, Ahlquist DA. Stool DNA screening for colorectal cancer: opportunities to improve value with next generation tests. Journal of Clinical Gastroenterology 2011 Apr;45(4):301-08. PMID: 20856138.

19. van Dam L, Kuipers EJ, van Leerdam ME. Performance improvements of stool-based screening tests. Best Practice & Research in Clinical Gastroenterology 2010 Aug;24(4):479-92. PMID: 20833351.

20. Ahlquist DA, Skoletsky JE, Boynton KA, et al. Colorectal cancer screening by detection of altered human DNA in stool: feasibility of a multitarget assay panel. Gastroenterology 2000 Nov;119(5):1219-27. PMID: 11054379.

21. Tagore KS, Lawson MJ, Yucaitis JA, et al. Sensitivity and specificity of a stool DNA multitarget assay panel for the detection of advanced colorectal neoplasia. Clinical Colorectal Cancer 2003 May;3(1):47-53. PMID: 12777192.

22. Calistri D, Rengucci C, Bocchini R, et al. Fecal multiple molecular tests to detect colorectal cancer in stool. Clinical Gastroenterology & Hepatology 2003 Sep;1(5):377-83. PMID: 15017656.

23. Brand RE, Ross ME, Shuber AP. Reproducibility of a multitarget stool-based DNA assay for colorectal cancer detection. American Journal of Gastroenterology 2004 Jul;99(7):1338-41. PMID: 15233675.

24. Syngal S, Stoffel E, Chung D, et al. Detection of stool DNA mutations before and after treatment of colorectal neoplasia. Cancer 2006 Jan 15;106(2):277-83. PMID: 16342248.

25. Whitney D, Skoletsky J, Moore K, et al. Enhanced retrieval of DNA from human fecal samples results in improved performance of colorectal cancer screening test. Journal of Molecular Diagnostics 2004 Nov;6(4):386-95. PMID: 15507679.

26. Olson J, Whitney DH, Durkee K, et al. DNA stabilization is critical for maximizing performance of fecal DNA-based colorectal cancer tests. Diagnostic Molecular Pathology 2005 Sep;14(3):183-91. PMID: 16106201.

27. Itzkowitz SH, Jandorf L, Brand R, et al. Improved fecal DNA test for colorectal cancer screening. Clinical Gastroenterology & Hepatology 2007 Jan;5(1):111-17. PMID: 17161655.

28. Itzkowitz S, Brand R, Jandorf L, et al. A simplified, noninvasive stool DNA test for colorectal cancer detection. American Journal of Gastroenterology 2008 Nov;103(11):2862-70. PMID: 18759824.

29. Chen WD, Han ZJ, Skoletsky J, et al. Detection in fecal DNA of colon cancer-specific methylation of the nonexpressed vimentin gene. Journal of the National Cancer Institute 2005 Aug 3;97(15):1124-32. PMID: 16077070.

30. Baek YH, Chang E, Kim YJ, et al. Stool methylation-specific polymerase chain reaction assay for the detection of colorectal neoplasia in Korean patients. Diseases of the Colon & Rectum 2009 Aug;52(8):1452-59. PMID: 19617759.

31. Li M, Chen WD, Papadopoulos N, et al. Sensitive digital quantification of DNA methylation in clinical samples. Nature Biotechnology 2009 Sep;27(9):858-63. PMID: 19684580.

32. Zou H, Allawi H, Cao X, et al. Sensitive quantification of vimentin methylation with a novel methylation specific qInvader technology. Clinical Chemistry 2010 Sep;56(6 Suppl.):D-144. PMID: None.

33. Imperiale TF, Ransohoff DF, Itzkowitz SH, et al. Fecal DNA versus fecal occult blood for colorectal-cancer screening in an average-risk population. N Engl J Med 2004;2004(26):2704-14. PMID: 15616205.

34. Ahlquist DA, Sargent DJ, Loprinzi CL, et al. Stool DNA and occult blood testing for screen detection of colorectal neoplasia. Annals of Internal Medicine 2008 Oct 1;149(7):441-50. PMID: 18838724.

35. DNA Direct. Who Should Consider ColoSure™ Colon Cancer Screening? San Francisco: DNA Direct Incorporated; 2011. Available at: https://www.dnadirect.com/web/article/screening-tests/colosure-stool-dna-testing/24/who-should-consider-screening. Accessed on July 20, 2011. PMID None.

36. Shuren J. Direct-to-Consumer Genetic Testing and the Consequences to the Public (congressional testimony). Silver Spring, MD: U.S. Food and Drug Administration; 2010. Available at: http://www.fda.gov/NewsEvents/Testimony/ucm219925.htm. Accessed on December 6, 2010. PMID None.

37. Exact Sciences. Fourth-Quarter & Full-Year 2010 Earnings Call. Fourth-Quarter & Full-Year 2010 Earnings Call; 2011 Feb 15; Madison, WI: Exact Sciences Corporation; 2011. PMID: None.

38. Whitlock EP, Lopez S, Chang S, et al. AHRQ Series Paper 3: Identifying, selecting, and refining topics for comparative effectiveness systematic reviews: AHRQ and the Effective Health-Care program. J Clin Epidemiol 2010;63:491-501. PMID: 19540721.

39. Lijmer JG, Mol BW, Heisterkamp S, et al. Empirical evidence of design-related bias in studies of diagnostic tests. JAMA 1999;282(11):1061-66. PMID: 10493205.

40. Whiting P, Rutjes AW, Reitsma JB, et al. Sources of variation and bias in studies of diagnostic accuracy: a systematic review. Ann Intern Med 2004 Feb 3;140(3):189-202. PMID: 14757617.

41. Agency for Healthcare Research and Quality. U.S. Preventative Services Task Force Procedure Manual. http://www uspreventiveservicestaskforce org/uspstf08/methods/procmanual htm. AHRQ Publication No.08-05118-EF. Rockville, MD: Agency for Healthcare Research and Quality; 2008. PMID: None.

42. Teutsch SM, Bradley LA, Palomaki GE, et al. The evaluation of genomic applications in practice and prevention (EGAPP) initiative: methods of the EGAPP working group. Genet Med 2009 Jan;11(1):3-14. PMID: 18813139.

43. Wells GA, Shea B, O'Connell D, et al. The Newcastle-Ottawa Scale (NOS) for assessing the quality of nonrandomised studies in meta-analyses. Ottawa: Ottawa Hospital Research Institute; 2011. Available at: http://www.ohri.ca/programs/clinical_epidemiology/oxford.asp. Accessed on March 11, 2011. PMID None.

44. Whiting P, Rutjes AW, Reitsma JB, et al. The development of QUADAS: a tool for the quality assessment of studies of diagnostic accuracy included in systematic reviews. BMC Med Res Methodol 2003 Nov 10;3:25. PMID: 14606960.

45. Owens DK, Lohr KN, Atkins D, et al. AHRQ series paper 5: grading the strength of a body of evidence when comparing medical interventions--agency for healthcare research and quality and the effective health-care program. J Clin Epidemiol 2010 May;63(5):513-23. PMID: 19595577.

46. Atkins D, Chang S, Gartlehner G, et al. Assessing applicability when comparing medical interventions: AHRQ and the Effective Health Care Program. J Clin Epidemiol 2011; PMID: 21463926.

47. Haug U, Hillebrand T, Bendzko P, et al. Mutant-enriched PCR and allele-specific hybridization reaction to detect K-ras mutations in stool DNA: high prevalence in a large sample of older adults. Clinical Chemistry 2007 Apr;53(4):787-90. PMID: 17317884.

48. Tang D, Liu J, Wang DR, et al. Diagnostic and prognostic value of the methylation status of secreted frizzled-related protein 2 in colorectal cancer. Clinical & Investigative Medicine - Medecine Clinique et Experimentale 2011;34(2):E88. PMID: 21463549.

49. Zhang H, Wang X, Ma Q, et al. Rapid detection of low-abundance K-ras mutation in stools of colorectal cancer patients using chip-based temperature gradient capillary electrophoresis. Lab Invest 2011 Jan 17; PMID: 21242956.

50. Ahlquist D, Domanico M, Mahoney DW, et al. Next Generation Stool DNA Testing for Detection of Colorectal Neoplasia: Early Marker Evaluation - Poster Presentation. Exact Sciences Corporation. 2011; PMID:None.

51. Azuara D, Rodriguez-Moranta F, de OJ, et al. Novel methylation panel for the early detection of colorectal tumors in stool DNA. Clinical Colorectal Cancer 2010 Jul;9(3):168-76. PMID: 20643622.

52. Chang E, Park DI, Kim YJ, et al. Detection of colorectal neoplasm using promoter methylation of ITGA4, SFRP2, and p16 in stool samples: a preliminary report in Korean patients. Hepato-Gastroenterology 2010 Jul;57(101):720-27. PMID: 21033217.

53. Hussain FT, Harrington JJ, Yab TC. Detection of serrated colorectal polyps by stool DNA testing. General Poster Session C: Cancers of the Colon and Rectum. 2010 Gastrointesinal Symposium; Orlando, FL. 2010. PMID: None

54. Kalimutho M, Blanco G, V, Gravina P, et al. Quantitative denaturing high performance liquid chromatography (Q-dHPLC) detection of APC long DNA in faeces from patients with colorectal cancer. Clinical Chemistry & Laboratory Medicine 2010 Sep;48(9):1303-11. PMID: 20504269.

55. Kisiel JB, Yab TC, Hussain FT, et al. Noninvasive detection of colorectal neoplasia (CRN) in inflammatory bowel disease (IBD) by stool DNA. Digestive Disease Week 2010; New Orleans, LA. 2010. p. 481. PMID: None.

56. Bosch LJ, Neerincx M, Oort FA, et al. Promoter Hypermethylation of PHACTR3, a Potential New Biomaker for Coorectal Cancer Detection. Digestive Disease Week 2009; Chicago, IL. 2009. p. W1874. PMID: None.

57. Calistri D, Rengucci C, Molinari C, et al. Quantitative fluorescence determination of long-fragment DNA in stool as a marker for the early detection of colorectal cancer. Cellular Oncology 2009;31(1):11-17. PMID: 19096146.

58. Cretella M, Kalimutho M, Mannisi E. Detection of L-DNA in stool samples using denaturing high performance liquid chromatography (DHPLC): A novel method for colorectal cancer screening? Gut 2009;58(Suppl II) PMID: None.

59. Glockner SC, Dhir M, Yi JM, et al. Methylation of TFPI2 in stool DNA: a potential novel biomarker for the detection of colorectal cancer. Cancer Research 2009 Jun 1;69(11):4691-99. PMID: 19435926.

60. Hellebrekers DM, Lentjes MH, van den Bosch SM, et al. GATA4 and GATA5 are potential tumor suppressors and biomarkers in colorectal cancer. Clinical Cancer Research 2009 Jun 15;15(12):3990-97. PMID: 19509152.

61. Kim MS, Louwagie J, Carvalho B, et al. Promoter DNA methylation of oncostatin m receptor-beta as a novel diagnostic and therapeutic marker in colon cancer. PLoS ONE [Electronic Resource] 2009;4(8):e6555. PMID: 19662090.

62. Mayor R, Casadome L, Azuara D, et al. Long-range epigenetic silencing at 2q14.2 affects most human colorectal cancers and may have application as a non-invasive biomarker of disease. British Journal of Cancer 2009 May 19;100(10):1534-39. PMID: 19384295.

63. Melotte V, Lentjes MH, van den Bosch SM, et al. N-Myc downstream-regulated gene 4 (NDRG4): a candidate tumor suppressor gene and potential biomarker for colorectal cancer. Journal of the National Cancer Institute 2009 Jul 1;101(13):916-27. PMID: 19535783.

64. Nagasaka T, Tanaka N, Cullings HM, et al. Analysis of fecal DNA methylation to detect gastrointestinal neoplasia. Journal of the National Cancer Institute 2009 Sep 16;101(18):1244-58. PMID: 19700653.

65. Zou H, Harrington J, Hussain FT. Stool DNA and Occult Blood for detection of Colorectal Cancer: Complementrary Markers. Digestive Disease Week 2009; Chicago, IL. 2009. p. T2034. PMID: None.

66. Zou H, Harrington J, Taylor WR. Pan-detection of Gastrointestinal Neoplasms by Stool DNA Testing: Establishment of Feasibility. Digestive Disease Week 2009; Chicago, IL. 2009. p. T2036.

67. Zou H, Taylor WR, Harrington JJ, et al. High detection rates of colorectal neoplasia by stool DNA testing with a novel digital melt curve assay. Gastroenterology 2009 Feb;136(2):459-70. PMID: 19026650.

68. Zou H, Jaing X, Harrington J. Quantitative Stool DNA testing for Detection of Both Colorectal Cancer and Advanced Adenoma. Digesive Disease Week 2009; 2009 May 30; Chicago, IL. 2009. p. T2037. PMID: None.

69. Oberwalder M, Zitt M, Wontner C, et al. SFRP2 methylation in fecal DNA--a marker for colorectal polyps. International Journal of Colorectal Disease 2008 Jan;23(1):15-19. PMID: 17639423.

70. Onouchi S, Matsushita H, Moriya Y, et al. New method for colorectal cancer diagnosis based on SSCP analysis of DNA from exfoliated colonocytes in naturally evacuated feces. Anticancer Research 2008 Jan;28(1A):145-50. PMID: 18383838.

71. Wang DR, Tang D. Hypermethylated SFRP2 gene in fecal DNA is a high potential biomarker for colorectal cancer noninvasive screening. World Journal of Gastroenterology 2008 Jan 28;14(4):524-31. PMID: 18203283.

72. Abbaszadegan MR, Tavasoli A, Velayati A, et al. Stool-based DNA testing, a new noninvasive method for colorectal cancer screening, the first report from Iran. World Journal of Gastroenterology 2007 Mar 14;13(10):1528-33. PMID: 17461444.

73. Abbaszadegan MR, Velayati A, Tavasoli A, et al. Rapid DNA extraction protocol from stool, suitable for molecular genetic diagnosis of colon cancer. Iranian Biomedical Journal 2007 Jul;11(3):203-08. PMID: 18051782.

74. Huang Z, Li L, Wang J. Hypermethylation of SFRP2 as a potential marker for stool-based detection of colorectal cancer and precancerous lesions. Digestive Diseases & Sciences 2007 Sep;52(9):2287-91. PMID: 17410438.

75. Huang ZH, Li LH, Yang F, et al. Detection of aberrant methylation in fecal DNA as a molecular screening tool for colorectal cancer and precancerous lesions. World Journal of Gastroenterology 2007 Feb 14;13(6):950-54. PMID: 17352030.

76. Leung WK, To KF, Man EP, et al. Detection of hypermethylated DNA or cyclooxygenase-2 messenger RNA in fecal samples of patients with colorectal cancer or polyps. American Journal of Gastroenterology 2007 May;102(5):1070-76. PMID: 17378912.

77. Onouchi S, Matsushita H, Nomura S, et al. PCR-based assessment of the recovery rate of exfoliated colonocytes or cancer cells from fecal samples depends on the storage conditions after defecation. Journal of Gastrointestinal & Liver Diseases 2007 Dec;16(4):369-72. PMID: 18193116.

78. Rennert G, Kislitsin D, Brenner DE, et al. Detecting K-ras mutations in stool from fecal occult blood test cards in multiphasic screening for colorectal cancer. Cancer Letters 2007 Aug 18;253(2):258-64. PMID: 17349741.

79. Zou H, Harrington J, Rego RL, et al. A novel method to capture methylated human DNA from stool: implications for colorectal cancer screening. Clin Chem 2007;2007(9):1646-51. PMID: 17712002.

80. Zhang W, Bauer M, Croner RS, et al. DNA stool test for colorectal cancer: hypermethylation of the secreted frizzled-related protein-1 gene. Diseases of the Colon & Rectum 2007;50(10):1618-26. PMID: 17762966.

81. Jin YM, Li BJ, Qu B, et al. BRAF, K-ras and BAT26 mutations in colorectal polyps and stool. World Journal of Gastroenterology 2006 Aug 28;12(32):5148-52. PMID: 16937524.

82. Zou H, Harrington JJ, Klatt KK, et al. A sensitive method to quantify human long DNA in stool: relevance to colorectal cancer screening. Cancer Epidemiology, Biomarkers & Prevention 2006 Jun;15(6):1115-19. PMID: 16775168.

83. Lenhard K, Bommer GT, Asutay S, et al. Analysis of promoter methylation in stool: a novel method for the detection of colorectal cancer. Clinical Gastroenterology & Hepatology 2005 Feb;3(2):142-49. PMID: 15704048.

84. Matsushita H, Matsumura Y, Moriya Y, et al. A new method for isolating colonocytes from naturally evacuated feces and its clinical application to colorectal cancer diagnosis. Gastroenterology 2005 Dec;129(6):1918-27. PMID: 16344060.

85. Petko Z, Ghiassi M, Shuber A, et al. Aberrantly methylated CDKN2A, MGMT, and MLH1 in colon polyps and in fecal DNA from patients with colorectal polyps. Clinical Cancer Research 2005 Feb 1;11(3):1203-09. PMID: 15709190.

86. Belshaw NJ, Elliott GO, Williams EA, et al. Use of DNA from human stools to detect aberrant CpG island methylation of genes implicated in colorectal cancer. Cancer Epidemiology, Biomarkers & Prevention 2004 Sep;13(9):1495-501. PMID: 15342451.

87. Calistri D, Rengucci C, Lattuneddu A, et al. Detection of colorectal cancer by a quantitative fluorescence determination of DNA amplification in stool. Neoplasia (New York) 2004 Sep;6(5):536-40. PMID: 15548362.

88. Leung WK, To KF, Man EP, et al. Detection of epigenetic changes in fecal DNA as a molecular screening test for colorectal cancer: a feasibility study. Clinical Chemistry 2004 Nov;50(11):2179-82. PMID: 15502094.

89. Muller HM, Oberwalder M, Fiegl H, et al. Methylation changes in faecal DNA: a marker for colorectal cancer screening? Lancet 2004 Apr 17;363(9417):1283-85. PMID: 15094274.

90. Wan J, Zhang ZQ, You WD, et al. Detection of K-ras gene mutation in fecal samples from elderly large intestinal cancer patients and its diagnostic significance. World Journal of Gastroenterology 2004 Mar 1;10(5):743-46. PMID: 14991952.

91. Boynton KA, Summerhayes IC, Ahlquist DA, et al. DNA integrity as a potential marker for stool-based detection of colorectal cancer. Clinical Chemistry 2003 Jul;49(7):1058-65. PMID: 12816901.

92. Ito Y, Kobayashi S, Taniguchi T, et al. Frequent detection of K-ras mutation in stool samples of colorectal carcinoma patients after improved DNA extraction: comparison with tissue samples. International Journal of Oncology 2002 Jun;20(6):1263-68. PMID: 12012008.

93. Koshiji M, Yonekura Y, Saito T, et al. Microsatellite analysis of fecal DNA for colorectal cancer detection. Journal of Surgical Oncology 2002 May;80(1):34-40. PMID: 11967905.

94. Nishikawa T, Maemura K, Hirata I, et al. A simple method of detecting K-ras point mutations in stool samples for colorectal cancer screening using one-step polymerase chain reaction/restriction fragment length polymorphism analysis. Clinica Chimica Acta 2002 Apr;318(1-2):107-12. PMID: 11880119.

95. Traverso G, Shuber A, Levin B, et al. Detection of APC mutations in fecal DNA from patients with colorectal tumors. New England Journal of Medicine 2002 Jan 31;346(5):311-20. PMID: 11821507.

96. Traverso G, Shuber A, Olsson L, et al. Detection of proximal colorectal cancers through analysis of faecal DNA. Lancet 2002 Feb 2;359(9304):403-04. PMID: 11844514.

97. Doolittle BR, Emanuel J, Tuttle C, et al. Detection of the mutated K-Ras biomarker in colorectal carcinoma. Experimental & Molecular Pathology 2001 Jun;70(3):289-301. PMID: 11418008.

98. Rengucci C, Maiolo P, Saragoni L, et al. Multiple detection of genetic alterations in tumors and stool. Clinical Cancer Research 2001 Mar;7(3):590-93. PMID: 11297253.

99. Kalimutho M, Del Vecchio BG, Cretella M, et al. A simplified, non-invasive fecal-based DNA integrity assay and iFOBT for colorectal cancer detection. Int J Colorectal Dis 2011 Jan 12; PMID: 21225430.

100. Calistri D, Rengucci C, Casadei GA, et al. Fecal DNA for noninvasive diagnosis of colorectal cancer in immunochemical fecal occult blood test-positive individuals. Cancer Epidemiology, Biomarkers & Prevention 2010 Oct;19(10):2647-54. PMID: 20929882.

101. Puig P, Urgell E, Capella G, et al. A highly sensitive method for K-ras mutation detection is useful in diagnosis of gastrointestinal cancer. International Journal of Cancer 2000 Jan 1;85(1):73-77. PMID: 10585586.

102. Soares-Weiser, K, Burch, J, Duffy, S, et al. Diagnostic accuracy and cost-effectiveness of faecal occult blood tests (FOBT) used in screening for colorectal cancer: a systematic review. CRD Report 362007. Centre for Reviews and Dissemination (CRD); 2007. PMID: None.

103. Chung DC. Stool DNA testing and colon cancer prevention: another step forward. Annals of Internal Medicine 2008 Oct 7;149(7):50918838724-510. PMID: 18838731.

104. Sun, F, Bruening, W, Erinoff, E, et al. Evaluation Frameworks and Assessment of Analytic Validity. AHRQ Publication No. 11-EHC048-EF. Rockville, MD: Agency for Healthcare Research and Quality; 2011. PMID: None.

105. Schroy PC, III, Heeren TC. Patient perceptions of stool-based DNA testing for colorectal cancer screening. Am J Prev Med 2005;2005(2):208-14. PMID: 15710277.

106. Berger BM, Schroy PC, III, Rosenberg JL, et al. Colorectal cancer screening using stool DNA analysis in clinical practice: early clinical experience with respect to patient acceptance and colonoscopic follow-up of abnormal tests. Clinical Colorectal Cancer 2006 Jan;5(5):338-43. PMID: 16512992.

107. Schroy PC, III, Lal S, Glick JT, et al. Patient preferences for colorectal cancer screening: how does stool DNA testing fare? Am J Manag Care 2007;13(6):393-400. PMID: 17620034.

108. Marshall DA, Johnson FR, Phillips KA, et al. Measuring patient preferences for colorectal cancer screening using a choice-format survey. Value in Health 2007 Sep;10(5):415-30. PMID: 17888107.

109. Marshall DA, Johnson FR, Kulin NA, et al. How do physician assessments of patient preferences for colorectal cancer screening tests differ from actual preferences? A comparison in Canada and the United States using a stated-choice survey. Health Economics 2009 Dec;18(12):1420-39. PMID: 19191268.

110. Lord SJ, Irwig L, Simes RJ. When is measuring sensitivity and specificity sufficient to evaluate a diagnostic test, and when do we need randomized trials? Ann Intern Med 2006 Jun 6;144(11):850-55. PMID: 16754927.

111. Medical Services Advisory Committee. Faecal occult blood testing for population health screening. Canberra: Medical Services Advisory Committee (MSAC); 2004. PMID: None.

112. Lansdorp-Vogelaar I, Kuntz KM, Knudsen AB, et al. Stool DNA testing to screen for colorectal cancer in the Medicare population: a cost-effectiveness analysis. Annals of Internal Medicine 2010 Sep 21;153(6):368-77. PMID: 20855801.

113. Institute of Medicine. Generating Evidence for Genomic Diagnostic Test Development: Workshop Summary. Washington, DC: The National Academies Press; 2011. PMID: None.

114. Exact Sciences. Exact Sciences Investor Update. Exact Sciences Corporation. 2010. PMID: None.

115. Sobhani I, Roudot-Thoraval F, Roperch JP, et al. Should FOBT Be Replaced by Altered DNA in Colorectal Cancer (CRC) Screening? Digestive Disease Week 2010; Chicago, IL. 2010. p. S1162. PMID: None.

116. Validation of an Alternative Biological Test to Increase the Dection Sensitivity of a Colon Tumour (study in progress). PMID:None.

117. Kanaoka S, Hamaya Y, Kuriyama S, et al. Fecal Beta2-Microglobulin and Creatine Kinase B mRNA Assays as a Marker for Colorectal Cancer Screening. 2011 May 7; Chicago, IL. 2011. p. Su1143. PMID: None.

118. Kanaoka S, Yoshida K, Hamaya Y, et al. Fecal RNA Testing Using Quantitative Real-Time RT-PCR for Detecting Colorectal Cancer and Adenoma. Digestive Disease Week; 2010 May 1; New Orleans, LA. 2010. p. S1139. PMID: None.

119. Kanaoka S, Yoshida K, Hamaya Y, et al. Usefulness of Fecal COX-2, MMP-7 and Snail mRNAs Assay Using Quantitative RT-PCR for Detecting Colorectal Cancer. 2009 May 30; Chicago, IL. 2009. p. T2043. PMID: None.

120. Koga Y, Yasunaga M, Takahashi A, et al. Fecal RNA test using microRNA expressions of exfoliated coloncytes for colorectal cancer screenings. 2011 Apr 2; Orlando, FL. Philadelphia, PA: American Association for Cancer Research; 2011. p. 1819. PMID: None.

121. Wu CW, Dong YJ, Ng SS, et al. Indentification of a panel of MicroRNAs in Stool Screening Markers for Colorectal Cancer. Digestive Disease Week; 2011 May 7; Chicago, IL. 2011. p. 351. PMID: None.

122. Link A, Balaguer F, Shen Y, et al. Fecal microRNAs: Novel Biomarkers for Colon Cancer Screening. Digest Disease Week; 2010 May 1; New Orleans, LA. 2010. PMID: None.

123. Wu CW, Ng SS, Lueng WW, et al. MicroRNAs in Stool as Screening Marker for Colorectal Cancer. Digestive Disease Week; 2010 May 1; New Orleans, LA. 2010. p. S1164. PMID: None.

124. Kim MS, Lee J, Sidransky D. DNA methylation markers in colorectal cancer. Cancer & Metastasis Reviews 2010 Mar;29(1):181-206. PMID: 20135198.

125. Ahlquist DA. Can a Serum Test Detect Cancer Precursor Lesions? Digestive Disease Week; 2011 May 7; Chicago, IL. 2011. p. Sp224. PMID: None.

126. Weiss G, Rosch T. Potential of a New Blood Test for Colorectal Cancer Screeing - The Septin 9 Gene Biomarker. European Oncology 2009;6(1):51-54. PMID: None.

127. Wang H, Schiller DE, Tso V, et al. A New and Highly Sensitive Screening Tool for Colorectal Adenoatous Polyps Using a Spot Urine Metabolomics test. Digestive Disease Week; 2011 May 7; Chicago, IL. 2011. p. Su1168. PMID: None

Abbreviations

95% CI- 95 percent confidence interval
ACR- American College of Radiology
ACS- American Cancer Society
AHRQ- Agency for Healthcare Research and Quality
CISNET- Cancer Intervention and Surveillance Modeling Network
CLIA- Clinical Laboratory Improvement Amendments
CMS- Centers for Medicare & Medicaid Services
CRC- Colorectal cancer
CT colonography- Computed tomographic colonography
DCBE- Double contrast barium enema
DIA- DNA integrity assay
DNA- Deoxyribonucleic acid
EHC Program- Effective Health Care Program
EPC- Evidence-based Practice Center
FAP- Familial adenomatous polyposis
FDA- US Food and Drug Administration
FIT- Fecal immunohistochemical test
FOBT- Fecal occult blood test (usually used to refer to guaiac based tests like Hemoccult II or Hemoccult Sensa versus immunohistochemical based tests for hemoglobin)
FPC- Familial polyposis coli
HNPCC- Hereditary nonpolyposis colorectal cancer
KQ- Key question
LDT- Laboratory-developed test
MBD- Methyl-binding domain
miRNA- MicroRNA
mRNA- Messenger RNA
MSTF- Multi- Society Task Force
NCI- National Cancer Institute
NPV- Negative predictive value
NR- Not reported
PCR- Polymerase chain reaction
PPV- Positive predictive value
RNA- Ribonucleic acid
sDNA – Stool DNA test
SES- Socioeconomic status
SIP- Scientific Information Packet
TEP- Technical Expert Panel
USPSTF- U.S. Preventive Services Task Force
WHO- World Health Organization

Glossary

Absolute test performance- Performance of a test (sensitivity, specificity) when compared to the gold standard

Accuracy- Ability of assay to measure what it purports to measure determined independently by a reference method

Adenoma- Benign tumor from epithelial tissue

Advanced adenomas- Adenomas 1 cm or greater, or with villous components (tubulovillous or villous), or with high-grade or severe dysplasia

Aliquots- A measured portion of a sample taken for analysis

Analytic factors- Test methods and performance of procedures, and monitoring and verification of accuracy and reliability of test results

Analytic sensitivity (lower limit of detection)- Ability of assay to detect all true positive specimens, for quantitative tests this is defined as the smallest quantity of a substance that can be reliably detected or quantified

Analytic specificity- Ability present in the sample of assay to measure the target substance when potentially interfering or cross-reacting substances are present in the sample

Analytic validity- An assay's ability to accurately and reliably measure the genotype (or analyte) of interest

Assay- An analysis conducted to verify the presence (and amount) of a substance

Chromosomal instability- The gain or loss of whole chromosomes or fractions of chromosomes

Clinical utility- A test's ability to improve clinical outcomes and the test's usefulness and value it adds to patient management decision-making, compared with current management without genetic testing

Clinical validity- A test's ability to accurately and reliably predict the clinically defined disorder or phenotype of interest

DNA integrity- Potential biomarker for colorectal cancer because DNA shed from cancer cells have been characterized as having longer DNA fragments as compared to DNA shed from non-cancer cells.

Epigenetics- Changes in gene expression caused by mechanisms other than changes in the DNA sequence

Germ-line- Genetic material passed from parents to offspring

Guaiac based fecal occult blood test (FOBT)- An assay to detect the presence of hemoglobin in the feces that is not visibly apparent in which feces is applied to a thick piece of paper attached to a thin film coated with guaiac (a phenolic compound)

Immunohistochemical based fecal occult blood test (FOBT) or fecal immunohistochemical test (FIT)- An assay to detect the presence of hemoglobin in feces that is not visibly apparent in which a fecal sample is collected with a small brush and transferred to a test card or slide. Occult blood is then detected using an antibody specific for human hemoglobin.

Initial test validation- study designed to determine ability and diagnostic accuracy of a test in persons with the target condition (as opposed to validation in the test's intended population); for this report in persons with known CRC or colorectal adenomas; these studies are most often case-control studies in which cases are persons with known CRC or colorectal cancer versus healthy controls

Methylation- The addition of a methyl group

Methylation specific PCR- A method of methylation analysis that uses bisulfite-treated DNA but does not require sequencing

Microsatellite instability- DNA damage due to defects in the normal DNA repair process

Oncogenes- Genes that have the potential to cause cancer

Pre-analytic factors- factors that may affect test performance prior to analysis specimen collection, processing, handling, and delivery to testing site

Proto-oncogenes- A normal gene that may become an oncogene due to mutations or increased expression

Reagent- A substance or mixture for use in chemical analysis or other reactions

Relative test performance- Diagnostic accuracy (sensitivity, specificity) when compared to another test that is not the gold standard

Repeatability- Replication of results when the assay is performed multiple times on a single specimen

Somatic cells- cells of the body excluding reproductive (germ-line) cells

Transcription- the copying of DNA into mRNA in gene expression

Tumor suppressor genes- a gene that protects a cell on the path to cancer

Wnt signaling pathway- a network of proteins in which alterations are associated with carcinogenesis